NR(D), NR4 In-line Pumps

n ≈ 2900 rpm
n ≈ 1450 rpm

The electropumps NR, NR4 series comply with the European Regulation no. 547/2012.

Materials

Component	Material
Pump casing Lantern bracket	Cast iron GJL 200 EN 1561
Impeller	Cast iron GJL 200 EN 1561 (Brass P-Cu Zn Pb 2 EN 1982 for NR-NR4 32..., 40..., 50/200)
Shaft	Chrome steel AISI 430 (Chrome-nickel steel AISI 303 for pumps with dimensions AD=128 mm or AD°=286 mm, see page for dimensions)
Mecanical seal	Carbon - Ceramic - NBR
Counterflanges	Steel Fe 42 UNI 7070

Construction

Close-coupled, single-impeller, centrifugal pumps; electric motor with extended shaft directly connected to the pump.

NR, NR4: Single head pump.
NRD: Twin head pump with built-in automatic switching valve. the two head can operate singularly or in parallel.

Pump casing with suction and delivery connections with the same diameter and on the same axis (in-line).

Connections: Flanges PN 10, EN 1092-2.

Counterflanges (on request)

Sizes	Flanges
NR,NR4 32,40,50,65 NRD 65	Screwed flanges PN 16, EN 1092-1
NR4 100, NR4 125	Flanges for welding PN 10, EN 1092-1

Version with frequency converter (on request)

Applications

For clean liquids, without abrasives, which are non-aggressive for the pump materials (contents of solids up to 0.2%).
For heating, conditioning, cooling and circulation plants.
For civil and industrial applications.
When low noise operation is required (n ≈ 1450 rpm).

Operating conditions

Liquid temperature from -10 °C to +90 °C.
Ambient temperature up to 40 °C.
Total suction lift up to 7 m.
Maximum permissible working pressure up to 10 bar.
Continuous duty.

Motor

2-pole induction motor, 50 Hz (n ≈ 2900 rpm).
NR(D) : three-phase 230/400 V ± 10% up to 3 kW;
400/690 V ± 10% from 4 to 18,5 kW.
NRM : single-phase 230 V ± 10%.

4-pole induction motor, 50 Hz (n ≈ 1450 rpm).
NR4: three-phase 230/400 V ± 10% up to 3 kW;
400/690 V ± 10% for 4 kW.
NRM4: single-phase 230 V ± 10%.

Insulation class F.
Protection IP 54.
Motor suitable for operation with frequency converter from 0,75 kW for NR4 and from 1,1 kW for NR(D).
Classification scheme IE3 for three-phase motors from 0,75 kW.
Constructed in accordance with EN 60034-1, EN 60034-30-1.
EN 60335-1, EN 60335-2-41.

Special features on request

- Other voltages.
- Protection IP 55.
- Frequency 60 Hz
- Special mechanical seal.
- Higher or lower liquid or ambient temperatures.
- Motor suitable for operation with frequency converter up to 0,55 kW for NR4 and up to 0,75 kW for NR.

NR(D) EI, NR4 EI In-line Pumps

Pumps with frequency converter

The **NR(D) EI, NR4 EI,** pumps are available with power from 0,25 kW up to 18,5 kW, the pumps are equipped with **I-MAT** installed on board which allows to realize a variable-speed system extremely compact and efficient, ideal in applications of water supply and in the distribution of hot and cold water.
The pump is equipped with transducers suitable for operation and is already programmed at the factory.

Advantages
- Energy saving
- Compact design
- Easy to use
- Programmable to suit the system requirements
- Reliability

Costruction
The system comprises of:
- Pump
- Induction motor (2 for NRD EI)
- I-MAT Frequency converter (2 for NRD EI)
- Motor adapter for the motor mounting of the frequency converter (2 for NRD EI)
- Connection cable between frequency converter and induction motor
- Transducers
- Communication cable for cascade mode for NRD EI
- 2 Cascade mode expansion board for NRD EI

Main features
Rated motor power output from 0,25 kW to 18,5 kW
Control range from 1750 to 2900 rpm (2-pole)
Control range from 870 to 1450 rpm (4-pole)
Protection against dry running
Protection against operations with closed valve ports
Protection against system leakages
Protection against overcurrent in the motor
Protection agains overvoltage and undervoltage of the power supply
Protection against current unbalances between phases

Operating modes

Constant pressure mode
with pressure transducer

In this mode, the system maintains the preset pressure when the flow required by the installation changes.

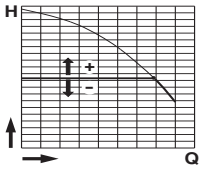

Proportional pressure mode
with pressure transducer

In this mode the system changes the working pressure according to the required flow rate.

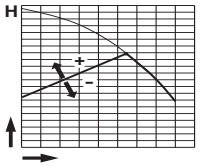

Constant flow mode
with flow meter

In this mode the system maintains a constant flow rate value in a point of the installation according to the required pressure.

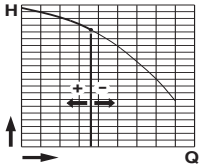

Fixed speed mode
with setting of the speed preferential rotation.

In this mode, by changing the working frequency, you may choose any operational curve included within the working range.

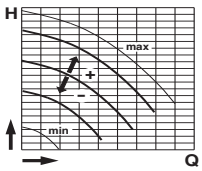

Constant temperature mode
with temperature transducer

In this mode the system keeps the temperature constant inside a system by changing the speed of the pump.

Coverage chart

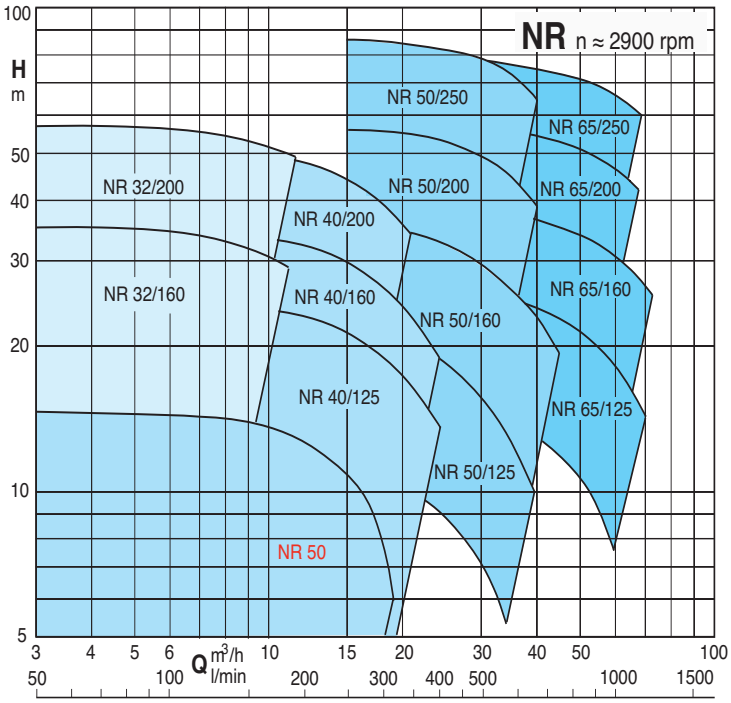

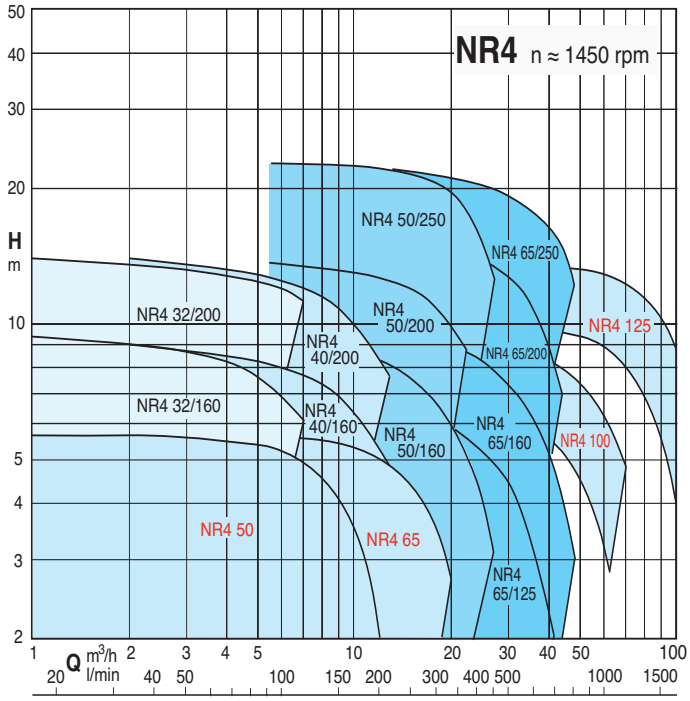

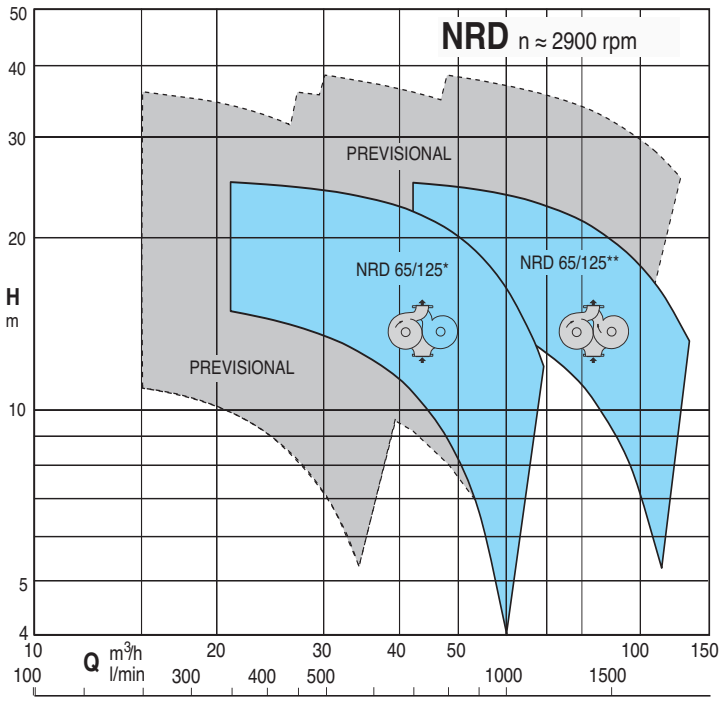

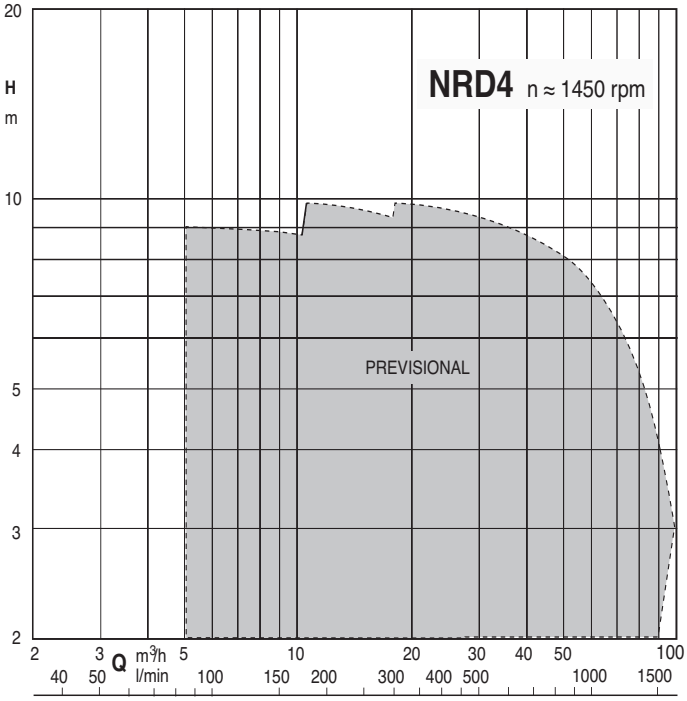

* Single operation
** Parallel operation

Performance n ≈ 2900 rpm

3 ~	230V	400V	1 ~	230V	P_1	P_2		Q m³/h	0	6	6,6	7,5	8,4	9,6	10,8	12	13,2	15	16,8	18,9
	A	A		A	kW	kW	HP	l/min	0	100	110	125	140	160	180	200	220	250	280	315
NR 50D/A	2,3	1,3	NRM 50D/A	3,6	0,72	0,45	0,6	H	11,6	11	10,8	10,5	10,2	9,5	8,5	7	6			
NR 50C/B	3,7	2,2	NRM 50C/A	5,7	1,13	0,75	1	m	16,2	16	15,9	15,8	15,7	15,3	14,6	14	13	11	9	5,5

3 ~	230V	400V	P_2		Q m³/h	0	2,4	3	3,6	4,8	6	6,6	7,5	8,4	9,6	10,8	12	13,2	15	16,8
	A	A	kW	HP	l/min	0	40	50	60	80	100	110	125	140	160	180	200	220	250	280
NR 32/160B/A	4,6	2,7	1,1	1,5		28,1	27,9	27,6	27,3	26,5	25,6	25,1	24,3	23,4	21,9	20				
NR 32/160A/A	7,5	4,3	1,5	2	H	36,8	36,3	36,1	35,7	35	34,3	33,8	33,2	32,4	31,2	29,7				
NR 32/200B/A	9,2	5,3	2,2	3	m	42,5		41,6	41,3	40,6	39,8	39,3	38,5	37,7	36,5	35,1	33,4			
NR 32/200A	11,5	6,6	3	4		51,2		49,7	49,5	48,9	48,2	47,9	47,2	46,5	45,4	44,2	42,8	41,2	37,9	
NR 32/200S/A		9,4	4	5,5		58		57,4	57,2	56,7	56,1	55,8	55,1	54,4	53,3	52	50,5	48,8	45,9	42,6

3 ~	230V	400V	P_2		Q m³/h	0	6,6	7,5	8,4	9,6	10,8	12	13,2	15	16,8	18,9	21	24
	A	A	kW	HP	l/min	0	110	125	140	160	180	200	220	250	280	315	350	400
NR 40/125C	4	2,3	0,75	1		15,5	15,7	15,5	15,3	14,8	14,3	13,6	12,9	11,6	10,2	8,1	5,8	
NR 40/125B/A	4,6	2,7	1,1	1,5		19,5	19,8	19,6	19,4	19,0	18,5	18,0	17,5	16,5	15,2	13,6	11,6	8,5
NR 40/125A/A	7,5	4,3	1,5	2		23,3	23,7	23,7	23,6	23,4	23,1	22,8	22,4	21,7	20,6	19,1	17,3	14,2
NR 40/160B/A	7,5	4,3	1,5	2	H	26,1	25,7	25,4	25,1	24,6	24,0	23,3	22,6	21,4	19,7	17,3	14,4	9,9
NR 40/160A/A	9,2	5,3	2,2	3	m	33,6	32,9	32,6	32,3	31,8	31,3	30,6	29,9	28,7	27,2	25,2	23,1	19,4
NR 40/200B	11,5	6,6	3	4		41,9	40,2	39,7	39,2	38,5	37,6	36,7	35,7	33,8	31,0	26,9	22,0	
NR 40/200A/A		9,6	4	5,5		52,4	49,6	49,1	48,5	47,6	46,7	45,7	44,7	43,0	41,2	38,6	34,8	

3 ~	230V	400V	P_2		Q m³/h	0	15	16,8	18,9	21	24	27	30	33	37,8	39	42	45
	A	A	kW	HP	l/min	0	250	280	315	350	400	450	500	550	630	650	700	750
NR 50/125F/A	4,6	2,7	1,1	1,5		14,9	13,8	13,4	12,8	12,1	11	9,9	8,4	6,9				
NR 50/125C/A	7,5	4,3	1,5	2		17,7	17,4	17	16,5	16	15	13,9	12,6	11,3	9	8,3		
NR 50/125A/B	9,2	5,3	2,2	3		22,2	21,7	21,4	21	20,6	19,8	18,8	17,5	16,3	14,1	13,5	12	
NR 50/160C/B	9,2	5,3	2,2	3		23,1	21,9	21,4	20,6	19,9	18,6	17,3	15,6	13,8	10,8	10		
NR 50/160B/A	11,5	6,6	3	4		28,6	27,9	27,4	26,7	26	24,6	23,1	21,3	19,7	16,6	15,7	13,6	
NR 50/160A/B		9,6	4	5,5	H	36,6	35,5	35,1	34,5	33,7	32,7	31,2	29,4	27,5	24,3	23,4	21,3	19,1
NR 50/200D/B		9,6	4	5,5	m	41,8	37,8	36,8	35,7	34,5	32,4	30,1	27,6	24,9				
NR 50/200B/A		10,8	5,5	7,5		50,9	48,5	47,7	46,8	45,7	43,9	41,7	39,2	36,5				
NR 50/200A/A		14,3	7,5	10		56,7	54,9	54,3	53,4	52,4	50,7	48,9	46,5	44,1	39,7	38,8		
NR 50/250C/B		18,5	9,2	12,5		61,2	58,8	58	57,3	56,5	55	53,2	51,1	48,9	44,8	43,1	39,4	
NR 50/250B/B		21,5	11	15		69,4	67	66,4	65,5	64,8	63,2	61,5	59,6	57,7	53,8	52,6	50	
NR 50/250A/B		27,3	15	20		87	84,6	84,1	83,2	82,3	80,7	78,8	76,9	74,3	69,8	68,4	65,2	

3 ~	230V	400V	P_2		Q m³/h	0	21	24	27	30	33	37,8	42	48	54	60	66	69	72
	A	A	kW	HP	l/min	0	350	400	450	500	550	630	700	800	900	1000	1100	1150	1200
NR 65/125F/B	9,2	5,3	2,2	3		16,5	16	15,7	15,3	14,8	14,3	13,5	12,5	11,1	9,5	7,3	5,3		
NR 65/125D/A	11,5	6,6	3	4		21,1	20,2	19,9	19,6	19,2	18,7	17,9	16,9	15,2	13,3	11,3	9,1		
NR 65/125A/B		9,6	4	5,5		25	24,4	24,1	23,8	23,4	23	22,2	21,4	19,8	18	15,9	13,7	12,4	
NR 65/125S/B		9,6	4	5,5		27,2	26,3	26	25,7	25,4	25	24,3	23,6	22,1	20,3	18,3	16,1	14,7	
NR 65/160B/A		10,8	5,5	7,5		31,9	32	31,7	31,4	30,9	30,4	29,5	28,6	26,8	24,8	22,2	19,7	18,3	16,7
NR 65/160A/A		14,3	7,5	10	H	39	39,3	39	38,7	38,3	37,9	36,9	36,1	34,7	32,9	30,6	28,1	26,7	25,3
NR 65/200B/B		18,5	9,2	12,5	m	47,1	46,7	45,9	45,1	44,4	43,6	42	40,5	37,9	35,3	32,4	28,3		
NR 65/200A/B		21,5	11	15		54,2	53,3	52,8	52,3	51,5	50,7	49,2	47,5	45,1	41,9	38,1	34,5		
NR 65/200S/B		27,3	15	20		60,4	60,5	60,2	59,6	59	58	56,3	54,5	52,2	49,5	46,5	42,7		
NR 65/250C/B		21,5	11	15		54,6	54,8	54,2	53,5	52,8	52	50,5	48,9	46,3	43,5	40,6	37,3		
NR 65/250B/B		27,3	15	20		67,1	67,2	66,7	66	65,1	64,3	62,8	61,3	58,6	55,8	52,9	49,7		
NR 65/250A/C		34	18,5	25		78,5	78,5	77,8	77,3	76,7	76	74,8	73,6	71,1	68,4	65,5	62,2		

P_1 Max. power input. P_2 Rated motor power output. Tolerances according to UNI EN ISO 9906:2012

NR4 In-line Pumps

calpeda

Performance n ≈ 1450 rpm

3 ~	230V	400V	1 ~	230V	P1	P2		Q m³/h	0	2	4	6	8	10	12	14	16	18	20	25				
	A	A		A	kW	kW	HP	l/min	0	33	67	100	133	167	200	233	267	300	333	417				
NR4 50C/A	1,35	0,75	NR4M 50C/A	2,1	0,27	0,25	0,34	H m	3,9	3,9	3,8	3,3	2,5											
NR4 50B/A	1,35	0,75	NR4M 50B/A	2,1	0,29	0,25	0,34		4,7	4,7	4,6	4,3	3,5	2,3										
NR4 50A/A	1,35	0,75	NR4M 50A/A	2,1	0,33	0,25	0,34		5,6	5,6	5,5	5,2	4,5	3,5	2									
NR4 65C/A	1,35	0,75	NR4M 65C/A	2,1	0,31	0,25	0,34		3,8			3,8	3,7	3,5	3,1	2,6	1,9							
NR4 65B/A	2,1	1,2				0,37	0,5		4,7			4,7	4,6	4,5	4,2	3,8	3,2	2,5						
NR4 65A/A	2,1	1,2				0,37	0,5		5,6			5,6	5,5	5,3	5	4,6	4,1	3,5	2,7					

3 ~	230V	400V		P2		Q m³/h	0	1	1,2	1,5	1,89	2,4	3	3,6	4,2	4,8	5,4	6	6,6	7,5	8,4	9,6
	A	A		kW	HP	l/min	0	16	20	25	31,5	40	50	60	70	80	90	100	110	125	140	160
NR4 32/160B	1,65	0,95		0,37	0,5	H m	8,1	7,9	7,9	7,7	7,6	7,4	7,2	6,9	6,6	6,1	5,6	4,4				
NR4 32/160A	1,65	0,95		0,37	0,5		9,2	9,3	9,3	9,2	9,1	9	8,8	8,6	8,3	8	7,6	7,2	6,6	5,6		
NR4 32/200C	1,65	0,95		0,37	0,5		11,5	11,3	11,3	11,2	11,1	10,9	10,7	10,5	10,2	9,9	9,5	9,1	8,5	7,4	5,7	
NR4 32/200B	2,6	1,5		0,55	0,75		13,2	13,2	13,2	13,1	13	12,9	12,8	12,6	12,4	12,1	11,8	11,4	10,9	10	9,1	7,5
NR4 32/200A/A	3,3	1,9		0,75	1		14,6	14,5	14,5	14,4	14,3	14,2	14,1	13,9	13,8	13,5	13,2	12,8	12,3	11,4	10,5	9,1

3 ~	230V	400V		P2		Q m³/h	0	2,4	3	3,6	4,8	5,4	6	7,5	8,4	9,6	10,8	12	13,2	15		
	A	A		kW	HP	l/min	0	40	50	60	80	90	100	125	140	160	180	200	220	250		
NR4 40/160B	1,65	0,95		0,37	0,5	H m	7,3	7,3	7,2	7,1	6,9	6,8	6,6	6,1	5,8	5,2	4,4	3,5	2,5			
NR4 40/160A	1,65	0,95		0,37	0,5		9,1	9,0	9,0	9,0	8,8	8,7	8,6	8,1	7,8	7,2	6,5	5,7	4,8	3,3		
NR4 40/200B	2,6	1,5		0,55	0,75		12,9	12,5	12,4	12,2	11,9	11,7	11,4	10,7	10,2	9,1	7,7	6,2	4,4			
NR4 40/200A/A	3,3	1,9		0,75	1		14,7	14,3	14,2	14,1	13,9	13,7	13,5	12,9	12,4	11,6	10,5	9,2	7,7	4,9		

3 ~	230V	400V		P2		Q m³/h	0	5,4	6	7,5	8,4	9,6	10,8	12	13,2	15	16,8	18,9	21	24	27	30
	A	A		kW	HP	l/min	0	90	100	125	140	160	180	200	220	250	280	315	350	400	450	500
NR4 50/160C	1,65	0,95		0,37	0,5	H m	5,9	5,9	5,8	5,7	5,6	5,4	5,2	5	4,7	4,2	3,7	3,1	2,3			
NR4 50/160B	2,6	1,5		0,55	0,75		7,3	7,4	7,4	7,2	7,1	6,9	6,7	6,4	6,2	5,7	5,2	4,5	3,8	2,5		
NR4 50/160A/B	3,3	1,9		0,75	1		9,2	9,2	9,2	9,1	9	8,9	8,7	8,4	8,2	7,6	7,1	6,4	5,6	4,4	3,1	
NR4 50/200B/B	5	2,9		1,1	1,5		12,8	12,6	12,5	12,3	12,1	11,9	11,5	11,2	10,7	10	9,2	8,2	7,1	5,2		
NR4 50/200A/B	5	2,9		1,1	1,5		14,3	14,1	14	13,9	13,7	13,5	13,2	12,8	12,4	11,7	11	10	8,8	7,3		
NR4 50/250C/B	6	3,5		1,5	2		17,1	17	16,9	16,6	16,4	16,1	15,9	15,6	15,2	14,6	13,9	12,8	11,3	8,5	5,3	
NR4 50/250B/B	8,6	5		2,2	3		21	20,9	20,8	20,5	20,3	20	19,7	19,4	19	18,4	17,8	16,8	15,6	13,8	11,7	8,5
NR4 50/250A/A	11,1	6,4		3	4		22	21,9	21,9	21,8	21,6	21,4	21,1	20,9	20,5	19,9	19,2	18,3	17,2	15,3	13,4	11

3 ~	230V	400V		P2		Q m³/h	0	10,8	12	13,2	15	16,8	18,9	21	24	27	30	33	37,5	42	48	
	A	A		kW	HP	l/min	0	180	200	220	250	280	315	350	400	450	500	550	630	700	800	
NR4 65/125F	1,65	0,95		0,37	0,5	H m	4,1	3,9	3,85	3,8	3,6	3,5	3,3	3	2,6	2,1	1,6	1				
NR4 65/125D	2,6	1,5		0,55	0,75		5,3	5	5	4,9	4,8	4,7	4,5	4,3	3,9	3,4	2,9	2,4	1,5			
NR4 65/125A/B	3,3	1,9		0,75	1		6,3	6,2	6,1	6	5,9	5,8	5,7	5,5	5,1	4,6	4,1	3,5	2,6	1,5		
NR4 65/125S/B	3,3	1,9		0,75	1		6,8	6,6	6,6	6,5	6,4	6,3	6,1	5,9	5,6	5,1	4,6	4,1	3,2	2,1		
NR4 65/160B/B	5	2,9		1,1	1,5		8,2	8,2	8,2	8,1	8	7,9	7,7	7,5	7,1	6,6	6	5,4	4,3	3,2		
NR4 65/160A/B	5	2,9		1,1	1,5		9,7	9,6	9,5	9,5	9,4	9,2	9	8,8	8,5	8	7,4	6,8	5,8	4,7	3	
NR4 65/200C/B	5	2,9		1,1	1,5		11,4	11,3	11,2	11,1	10,8	10,6	10,3	9,9	9,4	8,7	7,9	7	5,3	3,4		
NR4 65/200B/B	6	3,5		1,5	2		13,3	13,1	13	12,9	12,7	12,4	12,1	11,8	11,2	10,5	9,7	8,9	7,2	5,4		
NR4 65/200A/B	8,6	5		2,2	3		14,5	14,6	14,5	14,4	14,2	13,9	13,6	13,2	12,7	12	11,3	10,5	9	7,2		
NR4 65/250D/B	8,6	5		2,2	3		13,7	13,9	13,8	13,8	13,6	13,4	13,1	12,8	12,3	11,6	10,9	10,1	8,6	7,2		
NR4 65/250C/B	8,6	5		2,2	3		17,1	17,3	17,2	17,2	16,9	16,7	16,3	16	15,4	14,7	13,9	13	11,4	10		
NR4 65/250B/A	11,1	6,4		3	4		19,9	20,1	20	20	19,8	19,6	19,3	19	18,4	17,7	16,9	16,1	14,6	13,2	10,8*	
NR4 65/250A/A	14,4	8,3		4	5,5		21,4	21,6	21,5	21,4	21,3	21,1	20,8	20,5	19,9	19,2	18,4	17,6	16,1	14,7	12,2*	

3 ~	230V	400V		P2		Q m³/h	0	20	25	30	35	40	50	60	70	80	90	100	110			
	A	A		kW	HP	l/min	0	333	417	500	583	667	833	1000	1167	1333	1500	1667	1833			
NR4 100C/B	5	2,9		1,1	1,5	H m	6,6	6,6	6,4	6,3	6	5,6	4,6	3,3								
NR4 100B/B	5	2,9		1,1	1,5		7,5	7,5	7,4	7,2	7	6,6	5,6	4,4								
NR4 100A/B	6	3,5		1,5	2		9	9	8,9	8,8	8,6	8,3	7,4	6,2	4,8							
NR4 125C/B	8,6	5		2,2	3		10,2			10,2	10,1	10	9,6	9	8,2	7,1	5,7	4				
NR4 125B/A	11,1	6,4		3	4		12			12	11,9	11,8	11,6	11	10,4	9,4	8,2	6,7	5,1			
NR4 125A/A	14,4	8,3		4	5,5		13,6			13,6	13,5	13,4	13,2	12,9	12,3	11,4	10,3	8,8	7,2			

P_1 Max. power input. P_2 Rated motor power output. Tolerances according to UNI EN ISO 9906:2012

Performance n ≈ 2900 rpm

Single operation

3 ~	230V	400V	P_2		Q m^3/h	0	21	24	27	30	33	37,8	42	48	54	60	66	69			
	A	A	kW	HP	l/min	0	350	400	450	500	550	630	700	800	900	1000	1100	1150			
NRD 65/125F	9,2	5,3	2,2	3	H m	16,3	14,8	14,4	13,9	13,4	12,8	11,8	10,7	8,8	6,6	4,0					
NRD 65/125D	11,5	6,6	3	4		20,4	19,1	18,6	18,1	17,5	16,9	15,7	14,4	12,4	10,0	7,2	4,3				
NRD 65/125A		9,6	4	5,5		25,6	25,0	24,8	24,5	24,2	23,8	23,0	22,2	20,6	18,7	16,2	13,4	11,9			

Parallel operation

3 ~	230V	400V	P_2		Q m^3/h	0	42	48	54	60	66	75,6	84	96	108	120					
	A	A	kW	HP	l/min	0	700	800	900	1000	1100	1260	1400	1600	1800	2000					
NRD 65/125F	9,2 x2	5,3 x2	2,2 x2	3 x2	H m	16,3	15,2	14,8	14,4	13,8	13,0	11,7	10,2	7,9	5,2						
NRD 65/125D	11,5 x2	6,6 x2	3 x2	4 x2		20,4	19,8	19,4	18,9	18,4	17,7	16,4	15,0	12,7	10,0						
NRD 65/125A		9,6 x2	4 x2	5,5 x2		25,6	24,9	24,6	24,2	23,7	23,1	22,0	20,7	18,5	16,0	13,1					

P_1 Max. power input. P_2 Rated motor power output. Tolerances according to UNI EN ISO 9906:2012

Characteristic curves n ≈ 2900 rpm

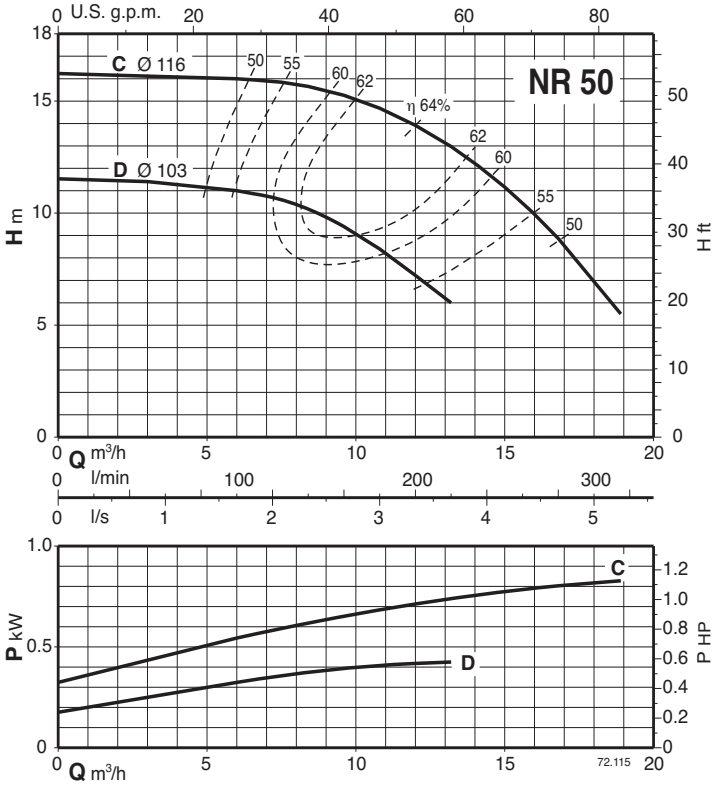

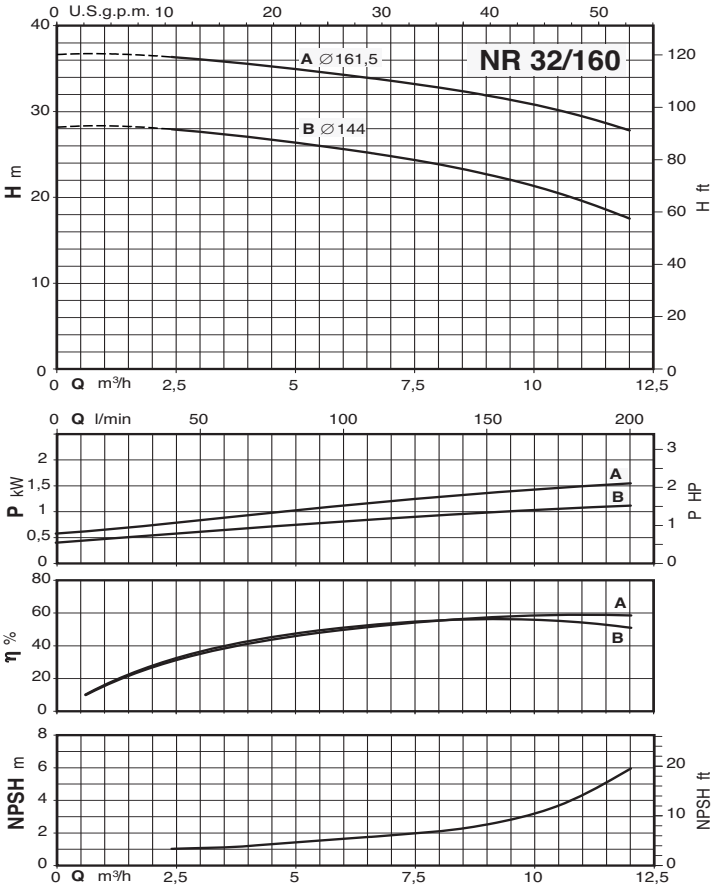

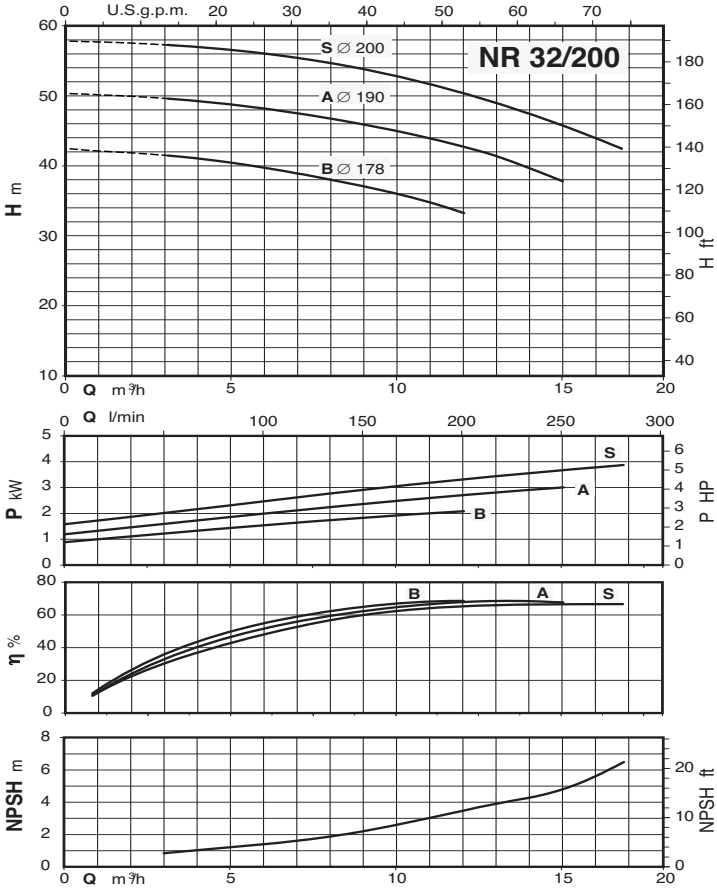

Characteristic curves n ≈ 2900 rpm

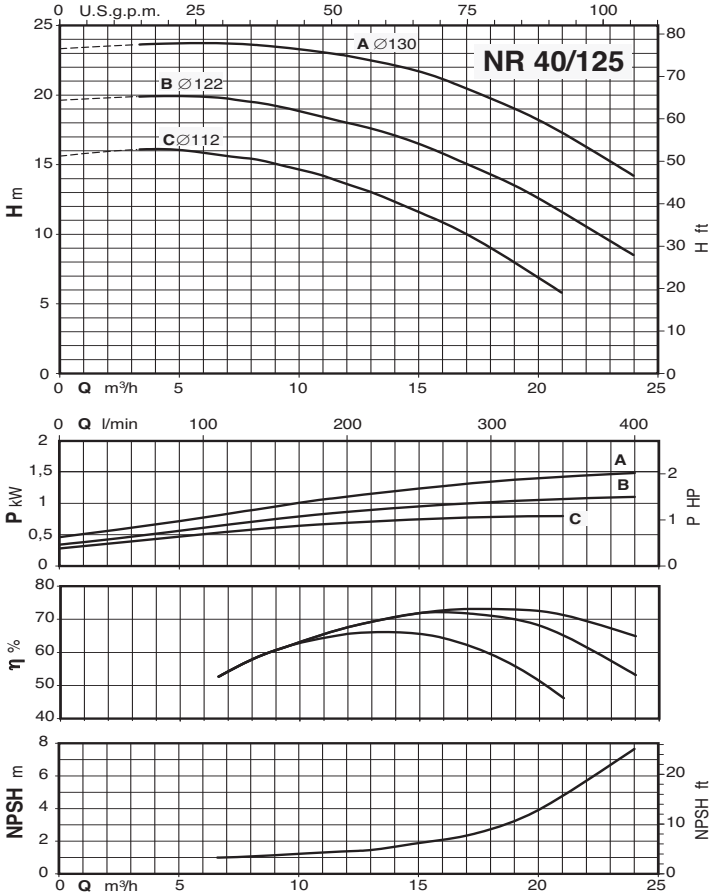

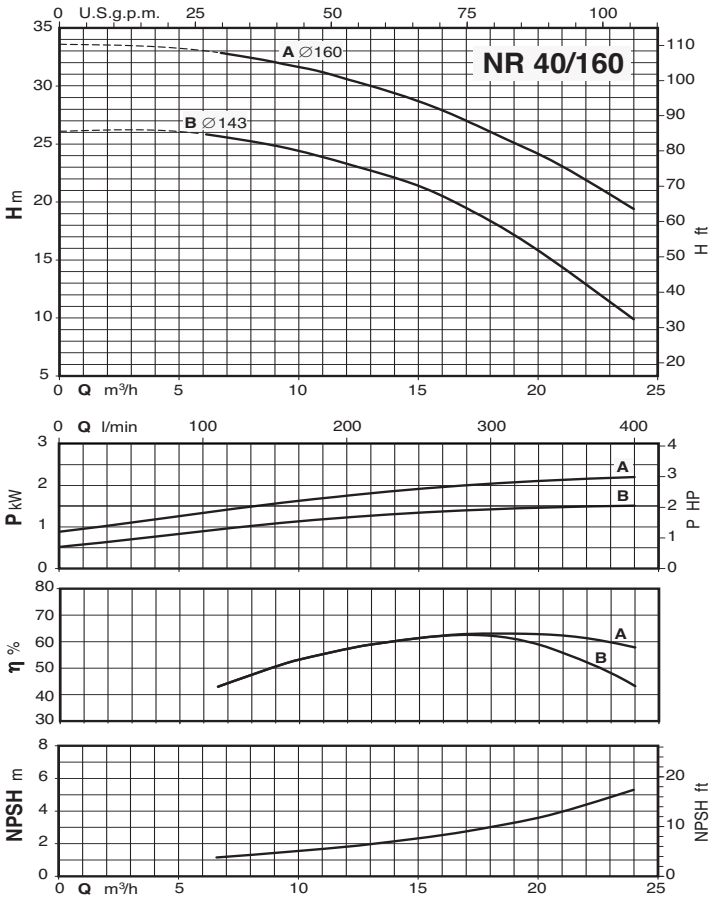

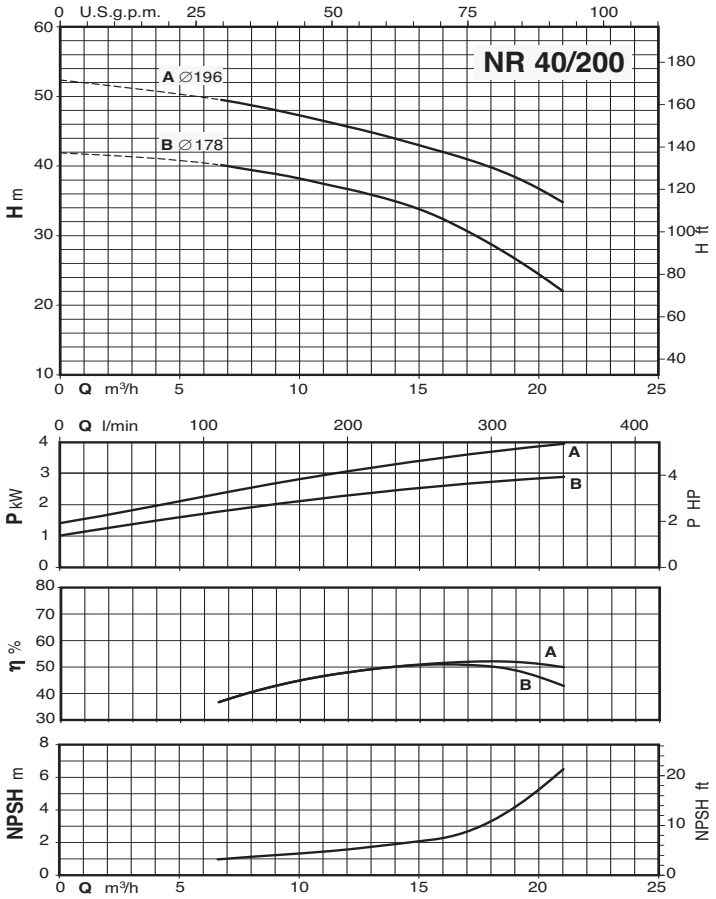

Characteristic curves n ≈ 2900 rpm

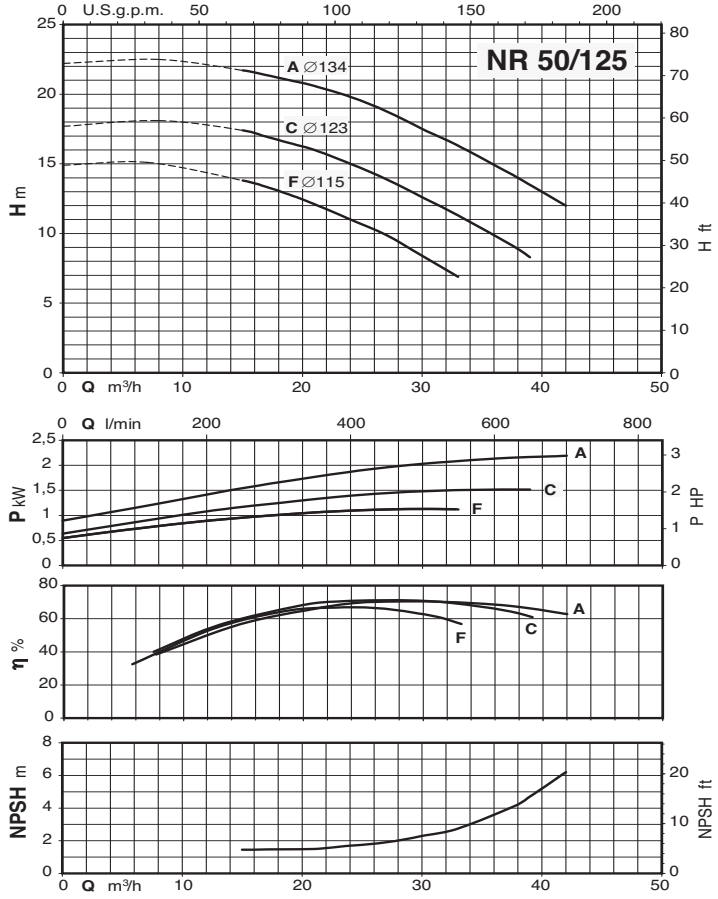

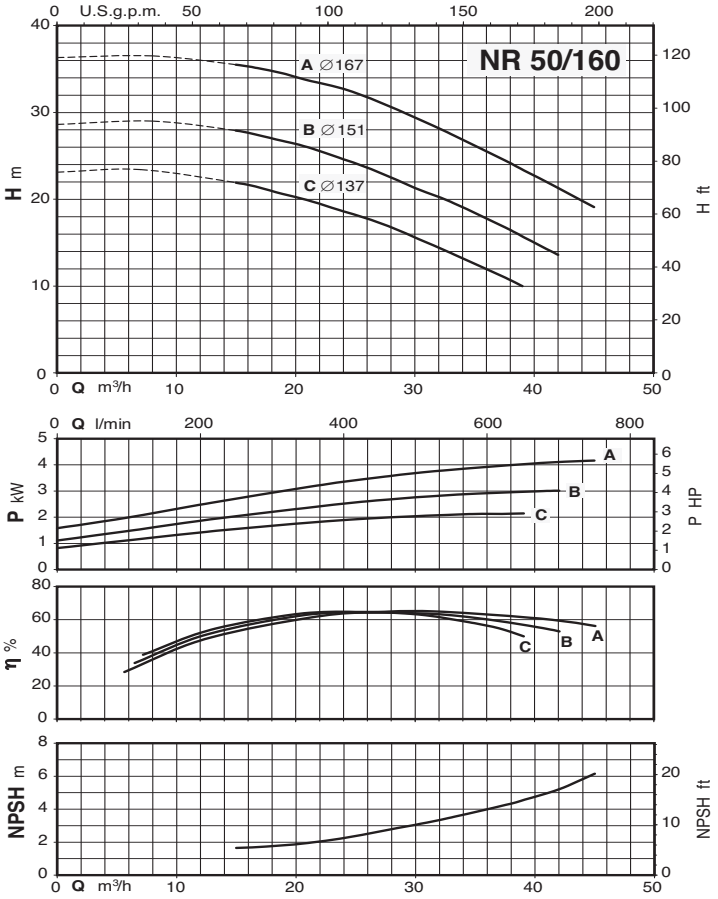

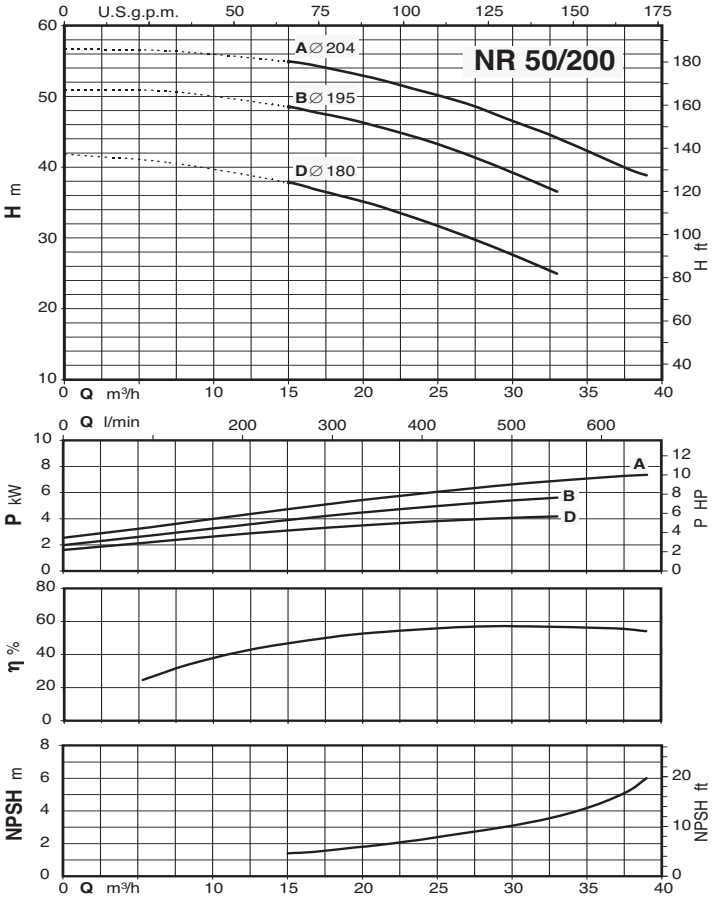

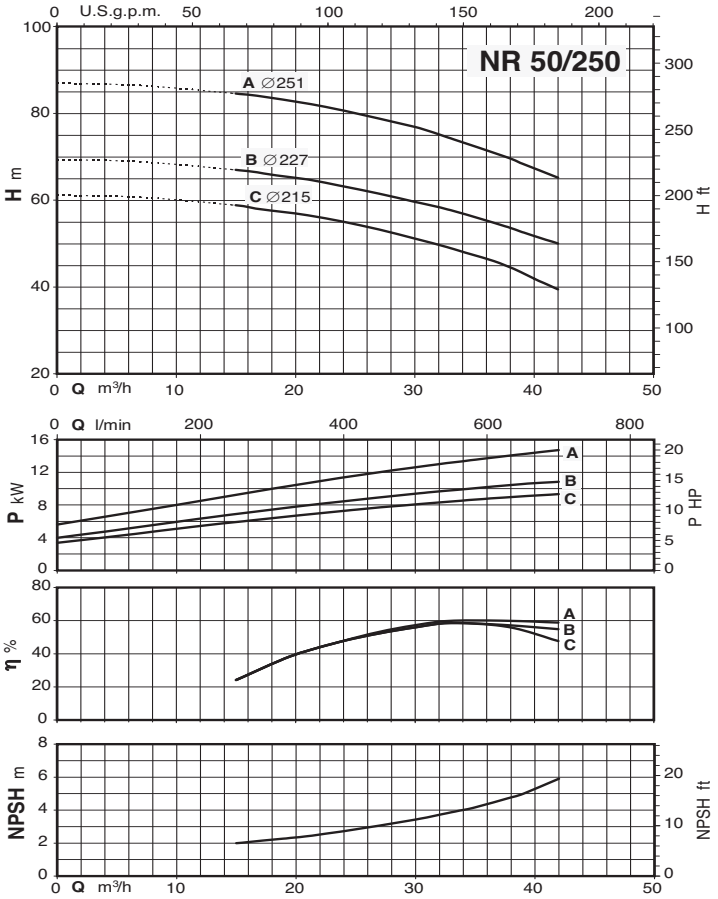

Characteristic curves n ≈ 2900 rpm

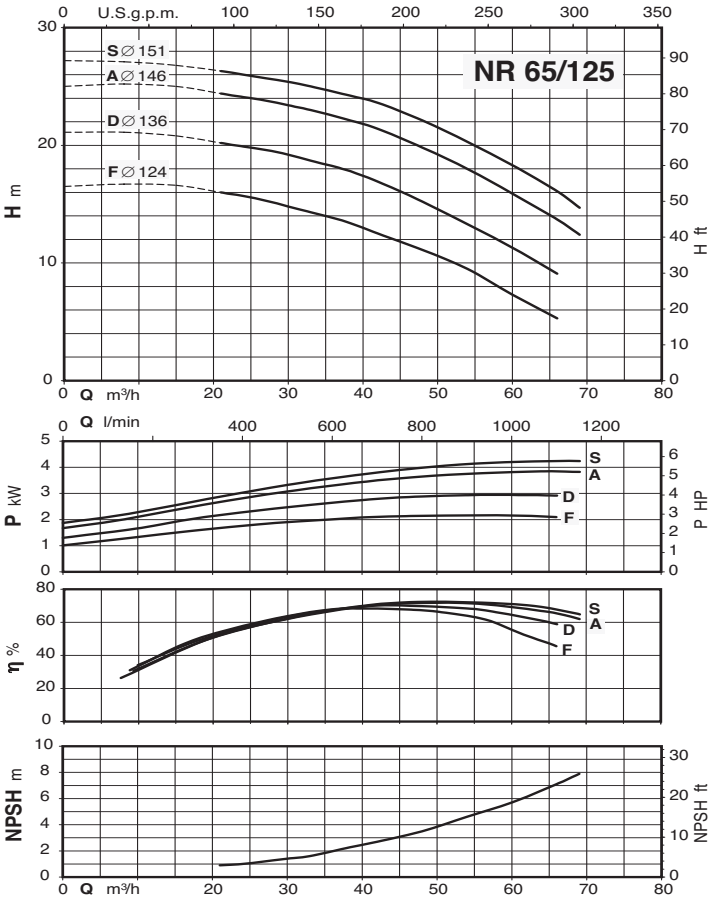

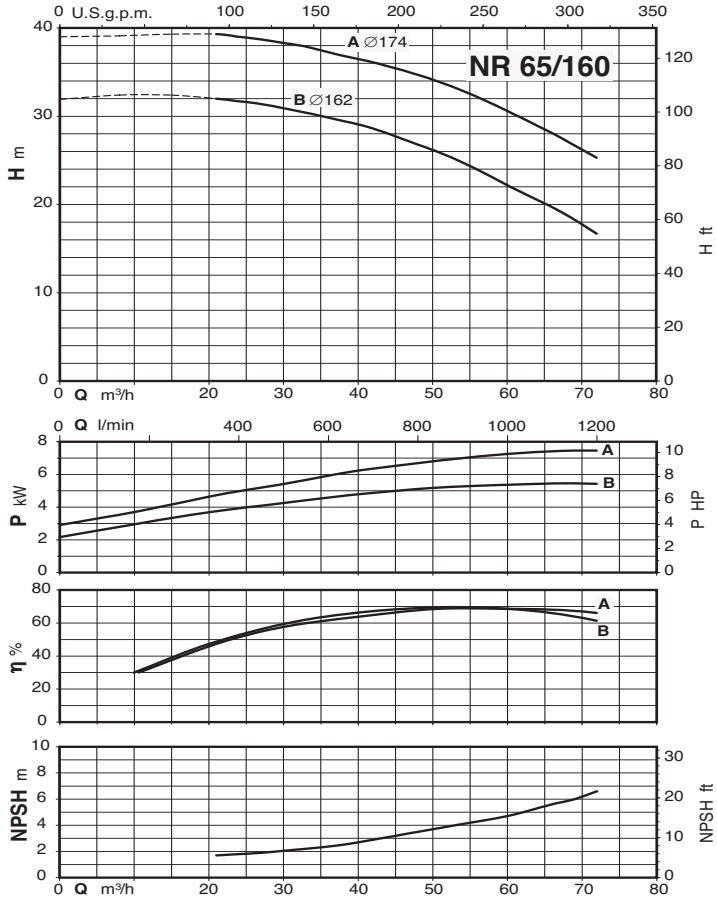

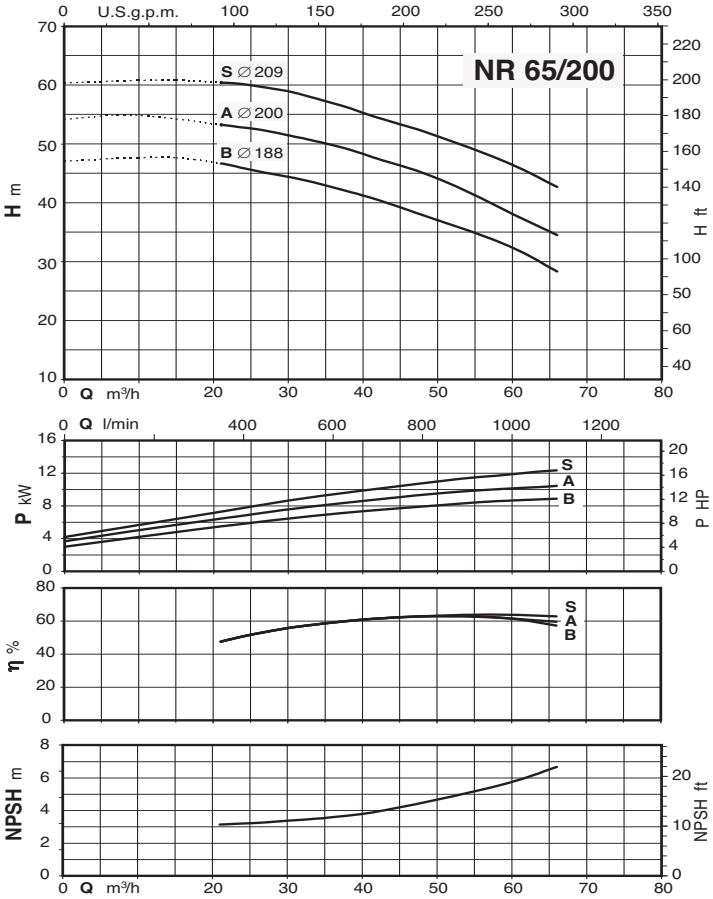

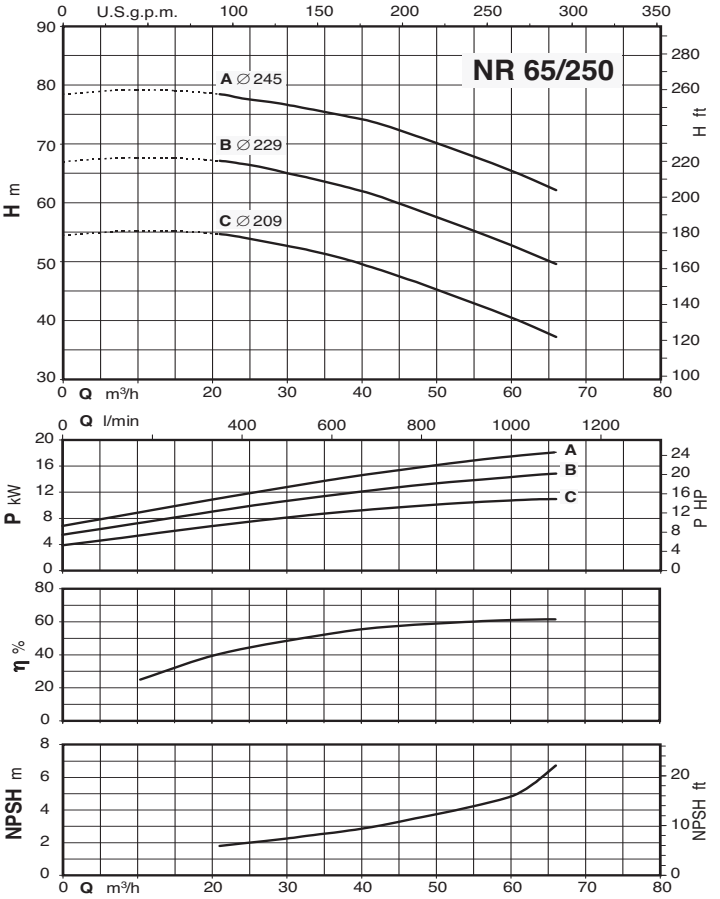

Characteristic curves n ≈ 1450 rpm

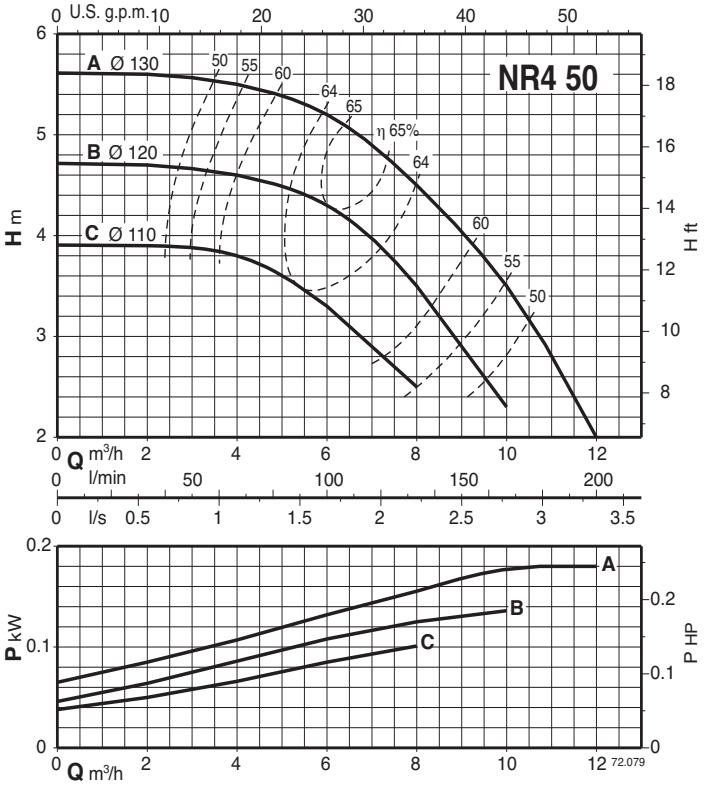

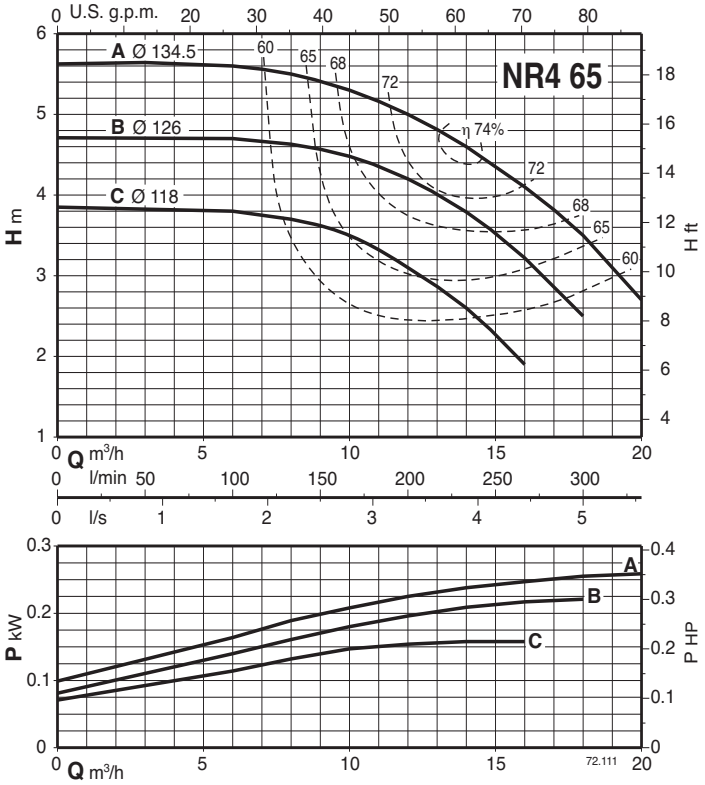

Characteristic curves n ≈ 1450 rpm

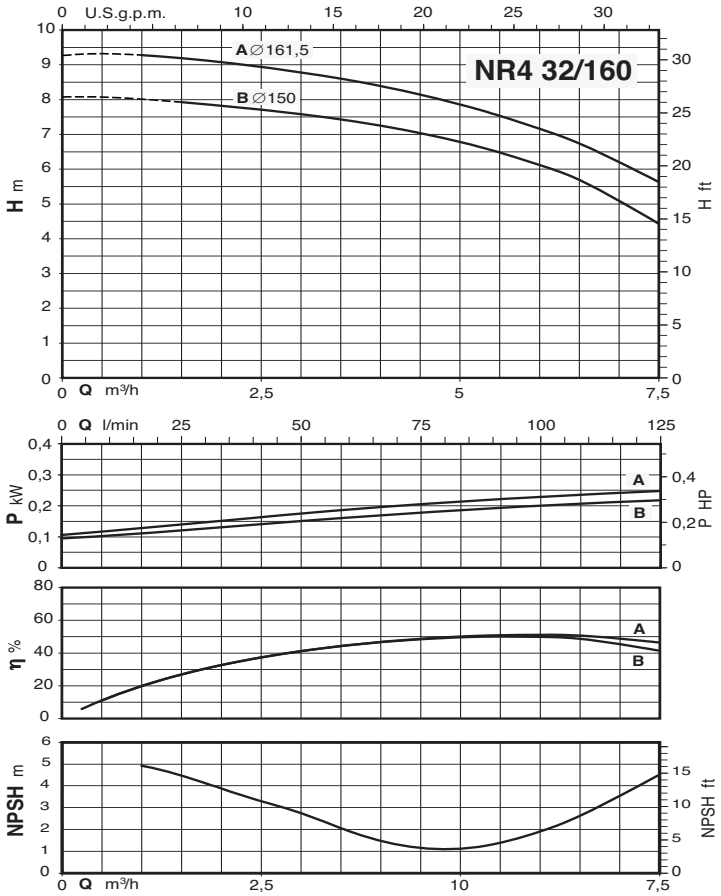

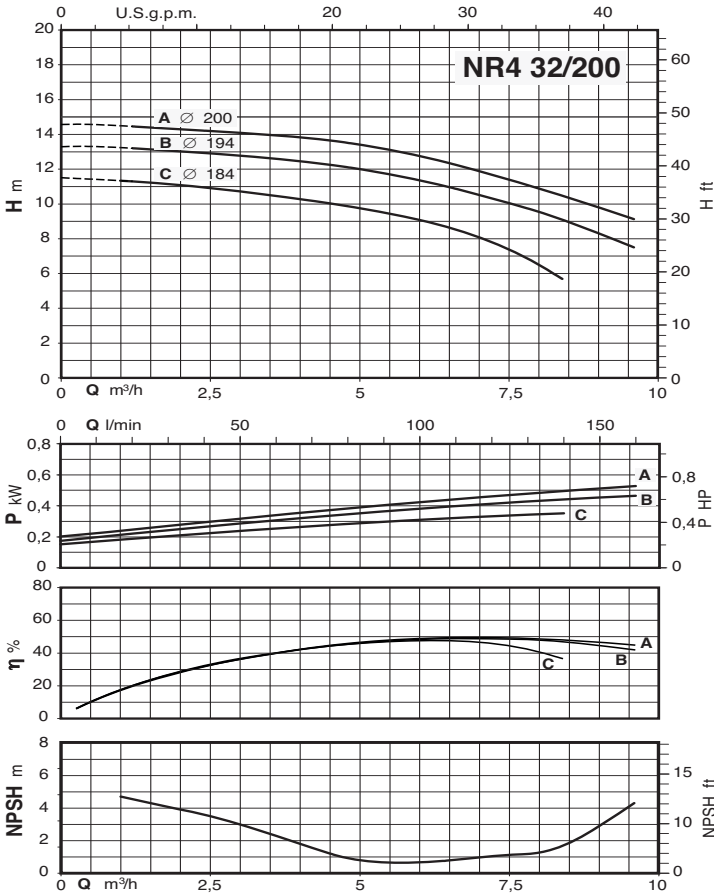

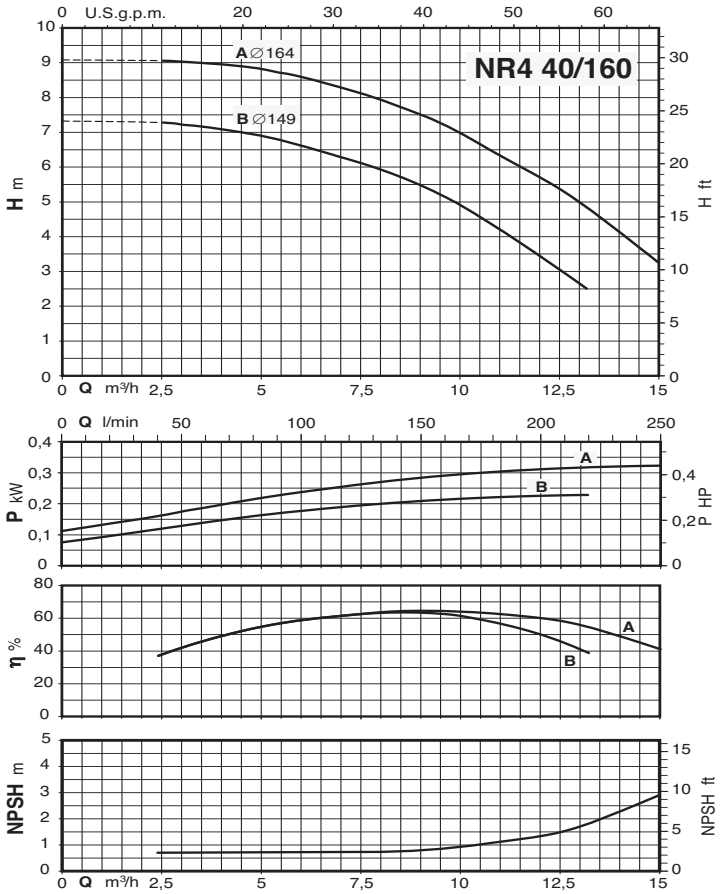

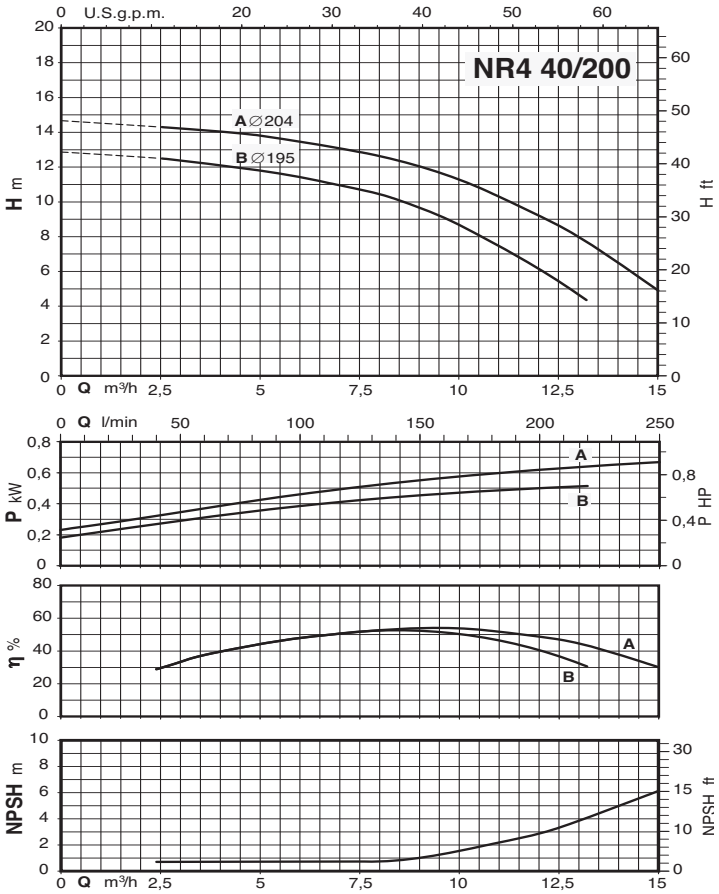

Characteristic curves n ≈ 1450 rpm

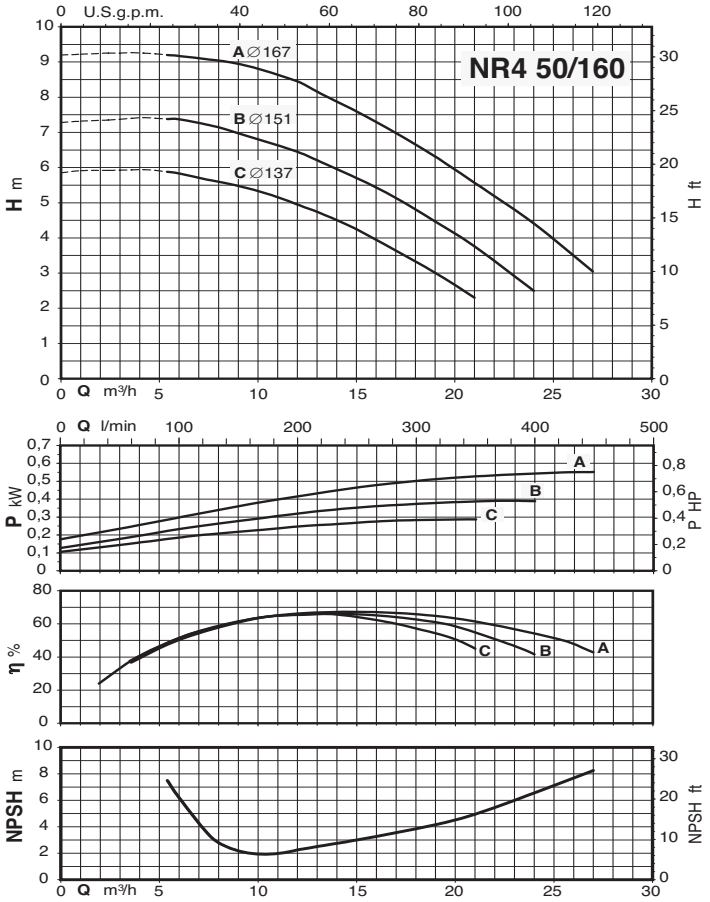

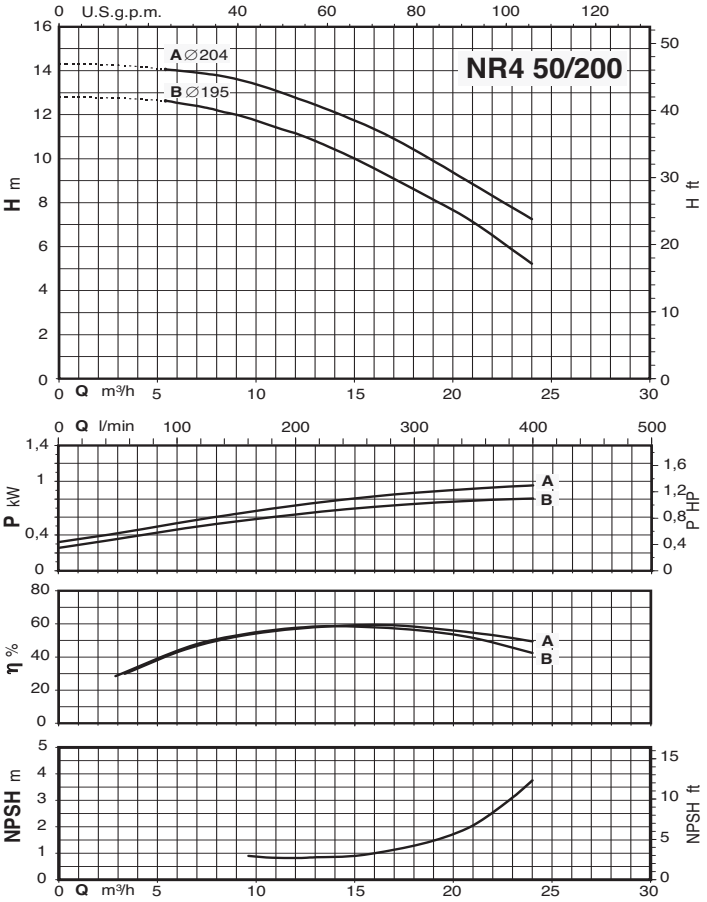

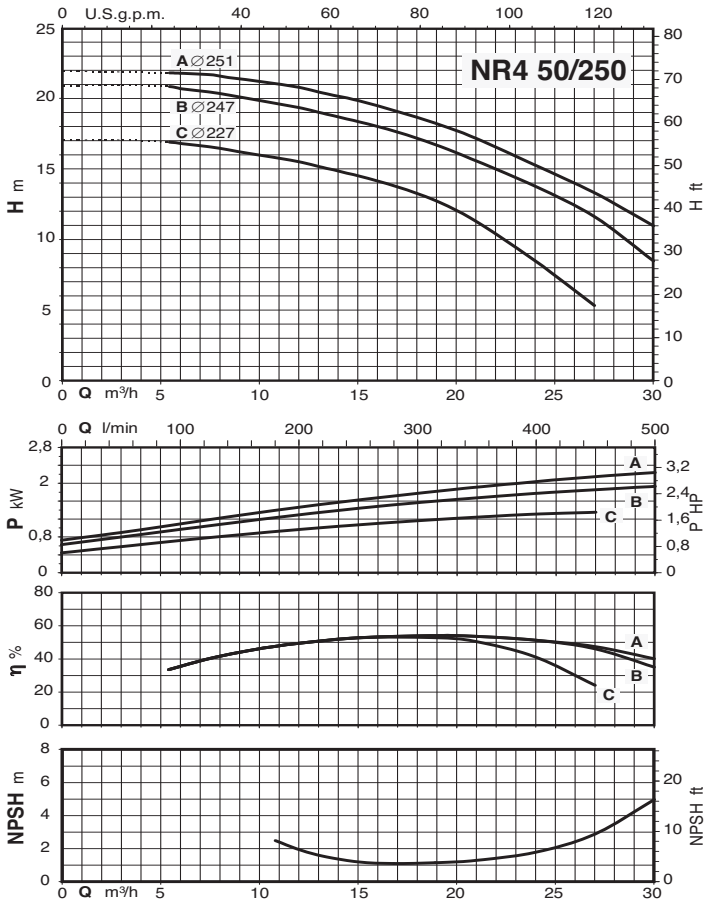

Characteristic curves n ≈ 1450 rpm

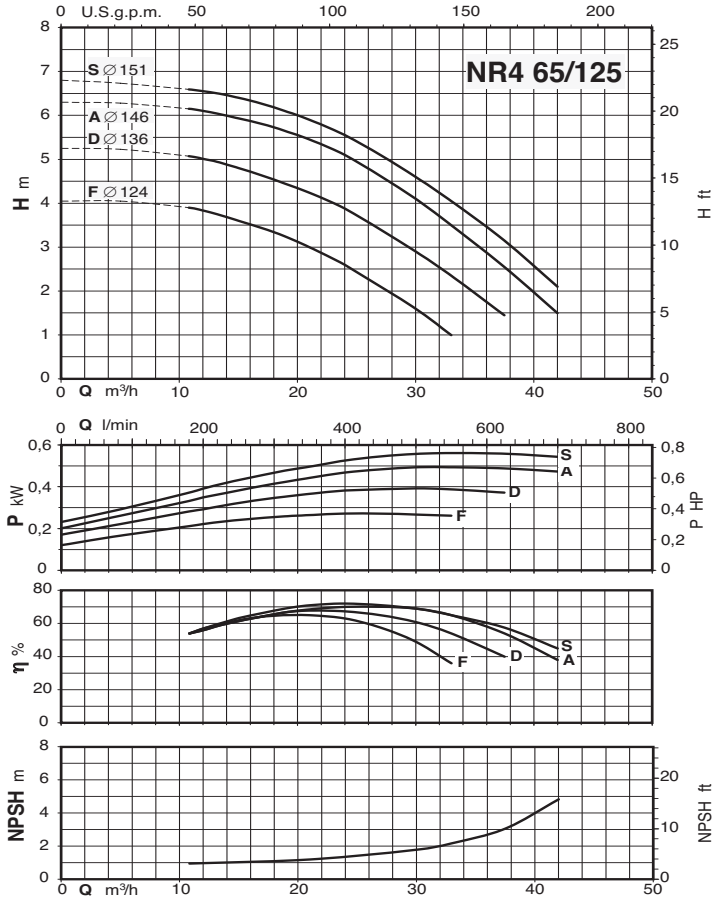

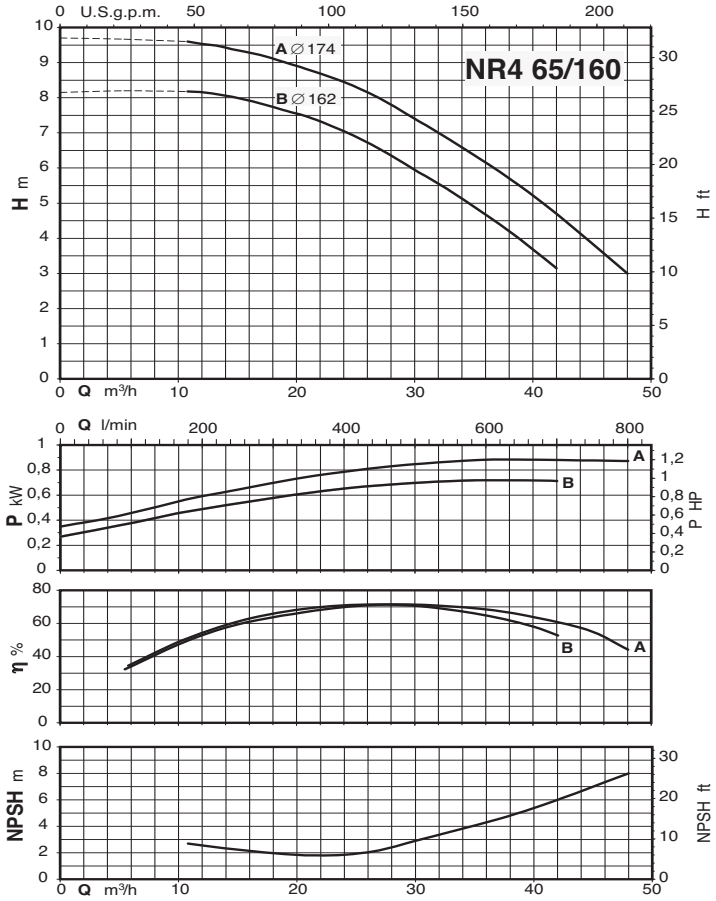

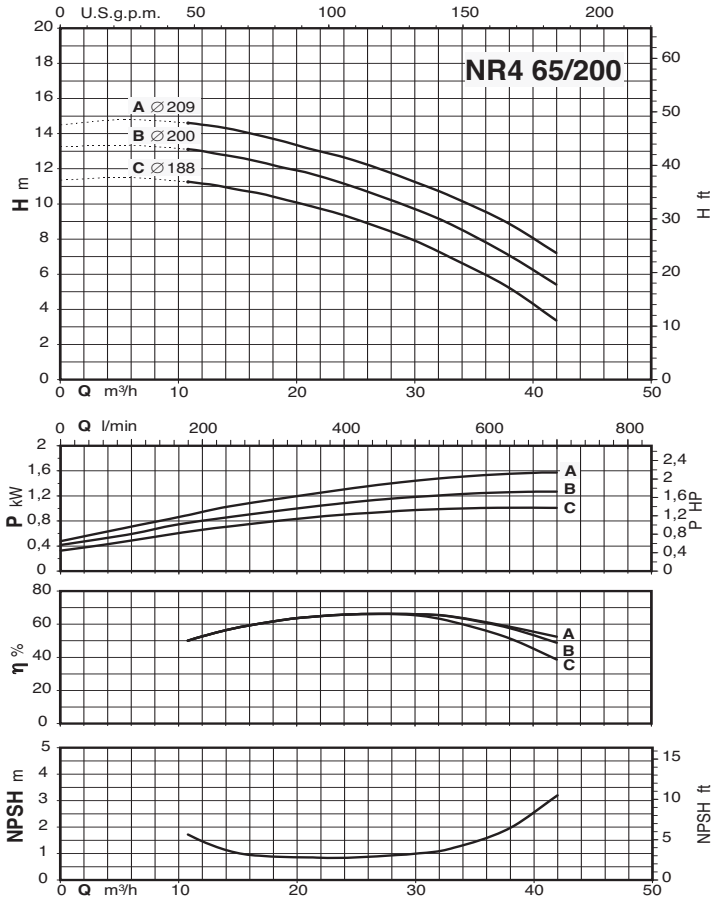

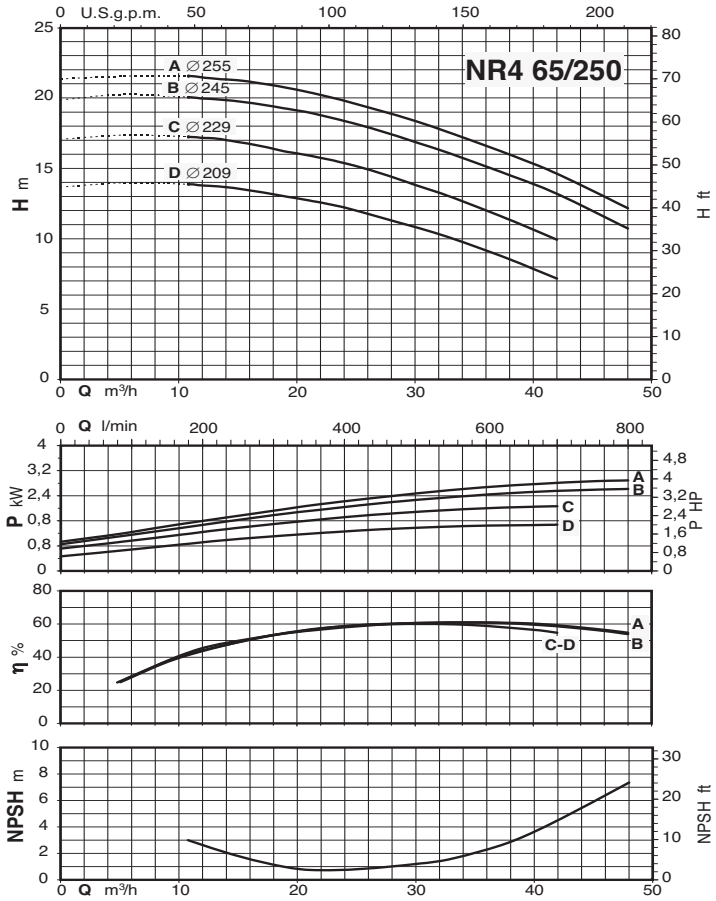

Characteristic curves n ≈ 1450 rpm

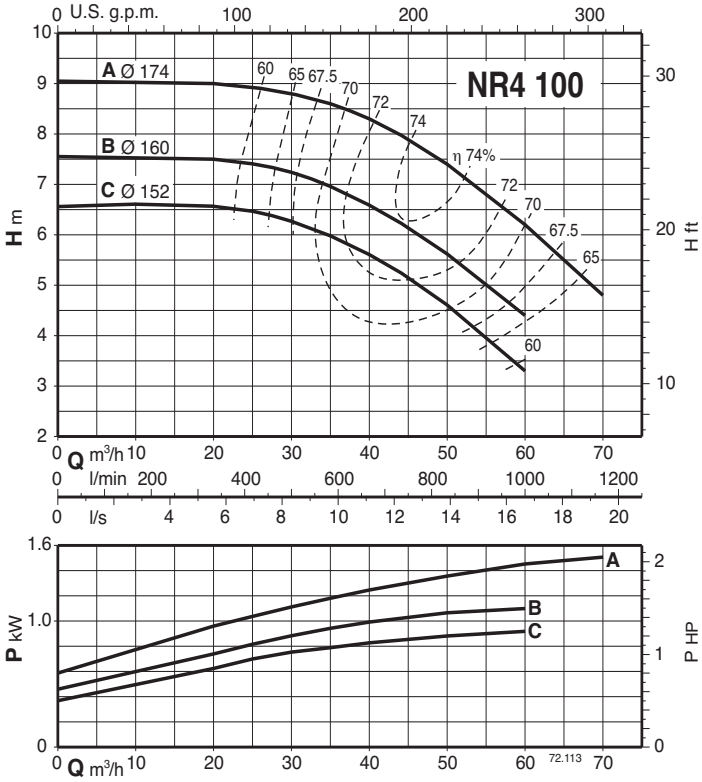

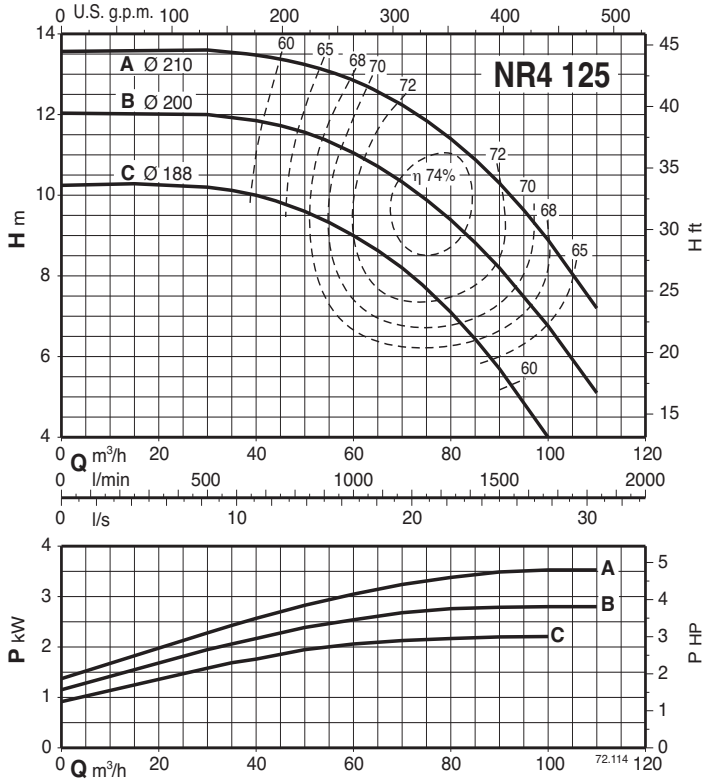

Curve caratteristiche n ≈ 2900 1/min

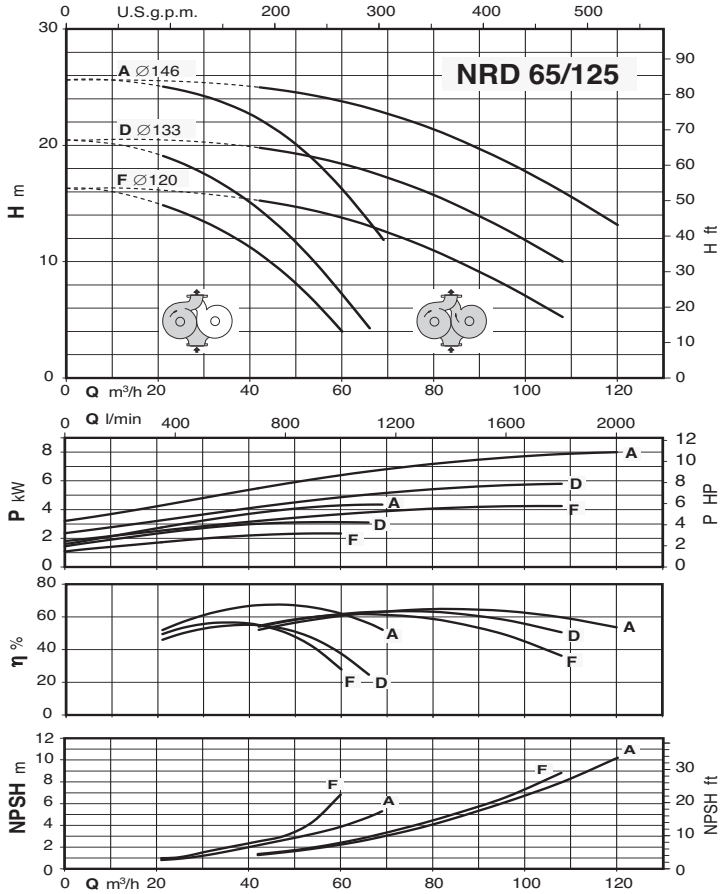

Dimensions and weights

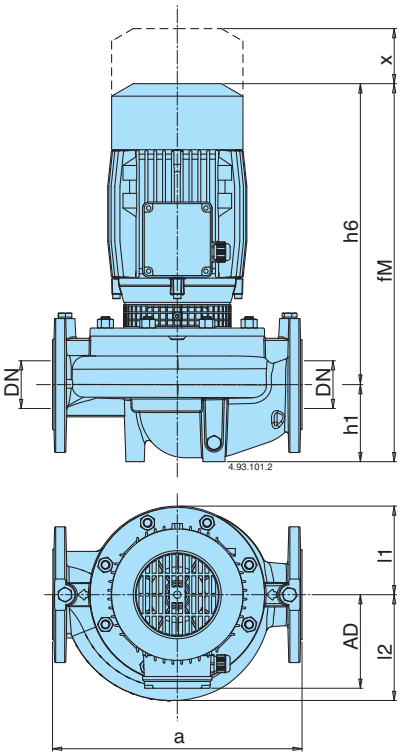

TYPE	mm													kg
	DN	a	fM	h1	h6	n2	m2	j1	Øb	AD	l1	l2	x	
NR 50D/A-C/B	50	320	360	90	270	-	-	-	98	111	93	100	70	21,7-23,8
NR 32/160A/A-B/A	32	340	421	80	341	76	90	50	-	128	102	102	60	28,6-27
NR 32/200B	32	440	469	85	384	84	104	60	-	128	126	126	60	36,3
NR 32/200A/A-S/A	32	440	495	85	410	84	104	60	-	138	126	126	60	44-47
NR 40/125A/A-B/A-C	40	320	420	81	339	80	80	49	-	128	93	98	70	29,5-27,5-26,5
NR 40/160B/A	40	320	430	81	349	80	80	49	-	128	119	119	75	35,0
NR 40/160A/A	40	320	470	81	389	80	80	49	-	128	119	119	75	40,0
NR 40/200A/A-B	40	440	496	81	430	95	102	62	-	138	140	140	75	56,6-53,4
NR 50/125C/A-F/A	50	340	437	90	347	79	85	45	-	128	96	115	75	31,5-29,5
NR 50/125A/B	50	340	477	90	387	79	85	45	-	128	96	115	75	36,1
NR 50/160C/B	50	340	480	90	390	79	85	45	-	128	120	128	75	41,6
NR 50/160A/B-B/A	50	340	506	90	416	79	85	45	-	138	120	128	75	51,8-48,5
NR 50/200D/B	50	440	516	100	416	79	85	45	-	138	140	140	80	59,7
NR 50/200A/A-B/A	50	440	544	100	444	79	85	45	-	160	140	140	80	77,2-69,7
NR 50/250C/B	50	440	657	100	557	79	85	45	-	185	175	175	85	114
NR 50/250B/B	50	440	707	100	557	79	85	45	-	185	175	175	85	121
NR 50/250A/B	50	440	732	100	632	79	85	45	-	185	175	175	85	149,5
NR 65/125F/B	65	340	494	105	389	110	110	60	-	128	121	145	95	46
NR 65/125S/B-A/B-D/A	65	340	520	105	415	110	110	60	-	138	121	145	95	56,1-56,1-54,6
NR 65/160A/A-B/A	65	340	552	105	447	110	110	60	-	160	121	142	95	74-67,5
NR 65/200B/B	65	475	666	105	561	110	110	60	-	185	140	153	90	108
NR 65/200A/B	65	475	716	105	611	110	110	60	-	185	140	153	90	114
NR 65/200S/B	65	475	741	105	636	110	110	60	-	185	140	153	90	142,5
NR 65/250C/B	65	475	722	105	567	110	110	60	-	185	175	175	90	134
NR 65/250B/B	65	475	747	105	642	110	110	60	-	185	175	175	90	155
NR 65/250A/C	65	475	793	105	688	110	110	60	-	206	175	175	90	-

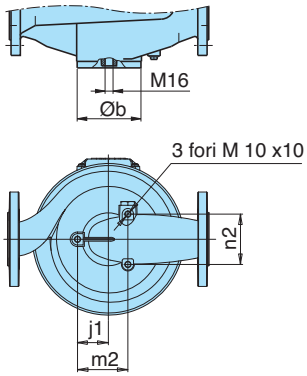

TYPE	mm													kg
	DN	a	fM	h1	h6	n2	m2	j1	Øb	AD	l1	l2	x	
NR4 50A/A-B/A-C/A	50	320	360	90	270	-	-	-	98	111	93	100	70	22-22-22
NR4 65A/A-B/A-C/A	65	360	370	100	270	-	-	-	118	111	102	114	70	28-28-28
NR4 100A/B-B/B-C/B	100	500	549	150	399	-	-	-	162	138	153	173	105	67-59-59
NR4 125C/B	125	600	589	170	419	-	-	-	194	138	172	195	120	91,5
NR4 125A/A-B/A	125	600	608	160	438	-	-	-	194	160	172	195	120	110-108
NR4 32/160A-B	32	340	421	80	341	76	90	50	-	128	102	102	60	23-22,9
NR4 32/200B-C	32	440	429	85	344	84	104	60	-	128	126	126	60	30,8-29,2
NR4 32/200A/A	32	440	469	85	344	84	104	60	-	128	126	126	60	
NR4 40/160A-B	40	320	430	81	349	80	80	49	-	128	119	119	75	31,5 - 31
NR4 40/200B	40	440	430	81	349	95	102	62	-	128	140	140	75	39,5
NR4 40/200A/A	50	440	470	81	349	79	85	45	-	128	140	140	75	43
NR4 50/160B-C	50	340	440	90	350	79	85	45	-	128	120	128	75	35,5-33,5
NR4 50/160A/B	50	340	480	90	350	79	85	45	-	128	120	128	75	37,5
NR4 50/200A/B-B/B	50	440	516	100	416	79	85	45	-	138	140	140	80	56
NR4 50/250C/B	50	440	516	100	416	79	85	45	-	138	175	175	85	77,5
NR4 50/250A/A-B/B	50	440	545	100	445	79	85	45	-	160	175	175	85	93,5-80
NR4 65/125D-F	65	340	454	105	349	110	110	60	-	128	121	145	95	39-37
NR4 65/125S/B-A/B	65	340	494	105	349	110	110	60	-	128	121	145	95	42-41,5
NR4 65/160A/B-B/B	65	340	504	105	399	110	110	60	-	138	121	142	95	42,7-42,5
NR4 65/200C/B	65	475	536	105	431	110	110	60	-	138	140	153	90	52
NR4 65/200B/B	65	475	536	105	431	110	110	60	-	138	140	153	90	60
NR4 65/200A/B	65	475	552	105	447	110	110	60	-	160	140	153	90	64,5
NR4 65/250C/B-D/B	65	475	555	105	450	110	110	60	-	160	175	175	90	75,5-75,5
NR4 65/250A/A-B/A	65	475	555	105	450	110	110	60		160	175	175	90	98-85

Flanges PN 10, EN 1092-2

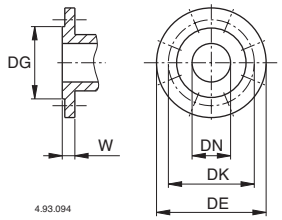

DN	mm					
	DG	DK	DE	Holes N°	Holes Ø	W
32	76	100	140	4	19	18
40	84	110	150	4	19	18
50	99	125	165	4	19	20
65	118	145	185	4	19	20
80	132	160	200	8	19	22
100	156	180	220	8	19	24
125	184	210	250	8	19	24

Installation

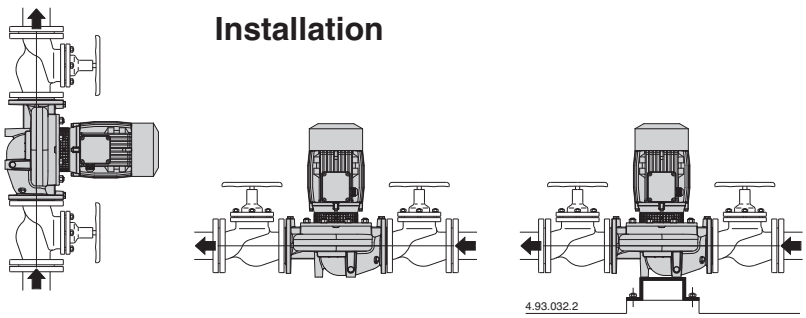

Dimensions and weights

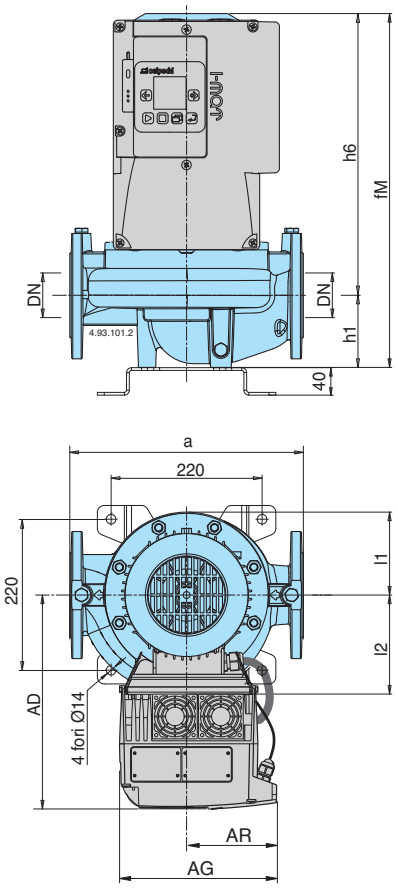

TYPE	mm											kg
	DN	a	fM	h1	h6	AD°	AG	AR	l1	l2	x	
NR EI 50D/A-C/B	50	320	399	90	270	270	190	105	93	100	70	28-30,2
NR EI 32/160A/A-B/A	32	340	421	80	341	286	190	105	102	102	60	35-33,3
NR EI 32/200B	32	440	469	85	384	286	210	118	126	126	60	43,8
NR EI 32/200A/A-S/A	32	440	495	85	410	294	210	118	126	126	60	51,5-54,5
NR EI 40/125A/A-B/A-C	40	320	420	81	339	286	190	105	93	98	70	35,9-33,9-32,9
NR EI 40/160B/A	40	320	430	81	349	286	190	105	119	119	75	41,4
NR EI 40/160A/A	40	320	470	81	389	286	210	118	119	119	75	47,5
NR EI 40/200A/A-B	40	440	496	81	430	294	210	118	140	140	75	64,1-61
NR EI 50/125C/A-F/A	50	340	437	90	347	286	190	105	96	115	75	37,9-35,9
NR EI 50/125A/B	50	340	477	90	387	286	210	118	96	115	75	43,6
NR EI 50/160C/B	50	340	480	90	390	286	210	118	120	128	75	49,1
NR EI 50/160A/B-B/A	50	340	506	90	416	294	210	118	120	128	75	59,3-56
NR EI 50/200D/B	50	440	516	100	416	294	210	118	140	140	80	67,2
NR EI 50/200A/A-B/A	50	440	544	100	444	368	281	153	140	140	80	92-84,5
NR EI 50/250C/B	50	440	657	100	557	393	281	153	175	175	85	128,8
NR EI 50/250B/B	50	440	707	100	557	393	281	153	175	175	85	135,8
NR EI 50/250A/B	50	440	732	100	632	471	350	190	175	175	85	184,5
NR EI 65/125F/B	65	340	494	105	389	286	210	118	121	145	95	53,5
NR EI 65/125S/B-A/B-D/A	65	340	520	105	415	294	210	118	121	145	95	63,6-63,6-62,1
NR EI 65/160A/A-B/A	65	340	552	105	447	368	281	153	121	142	95	88,8-82,3
NR EI 65/200B/B	65	475	666	105	561	368	281	153	140	153	90	122,8
NR EI 65/200A/B	65	475	716	105	611	393	281	153	140	153	90	128,8
NR EI 65/200S/B	65	475	741	105	636	471	350	190	140	153	90	177,5
NR EI 65/250C/B	65	475	722	105	567	393	281	153	175	175	90	148,8
NR EI 65/250B/B	65	475	747	105	642	471	350	190	175	175	90	190
NR EI 65/250A/C	65	475	793	105	688	491	350	190	175	175	90	-

Flanges PN 10, EN 1092-2

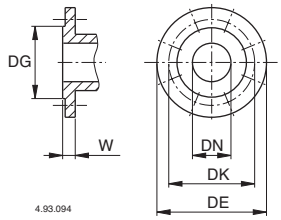

DN	mm					
	DG	DK	DE	Holes N°	Holes Ø	W
32	76	100	140	4	19	18
40	84	110	150	4	19	18
50	99	125	165	4	19	20
65	118	145	185	4	19	20
80	132	160	200	8	19	22
100	156	180	220	8	19	24
125	184	210	250	8	19	24

TYPE	mm											kg
	DN	a	fM	h6	h2	AD°	AG	AR	l1	l2	x	
NR4 EI 50A/A-B/A-C/A	50	320	399	90	270	270	190	105	93	100	70	28,4-28,4-28,4
NR4 EI 65A/A-B/A-C/A	65	360	409	100	270	270	190	105	102	114	70	34,4-34,4-34,4
NR4 EI 100B/B-C/B	100	500	549	150	399	294	190	105	153	173	105	65,4-65,4
NR4 EI 100A/B	100	500	549	150	399	294	190	105	153	173	105	73,4
NR4 EI 125A/A-B/A-C/B	125	600	608	160	438	368	210	118	172	195	120	117,5-115,5-97,9
NR4 EI 32/160A-B	32	340	421	80	341	286	190	105	102	102	60	29,4-29,3
NR4 EI 32/200B-C	32	440	429	85	344	286	190	105	126	126	60	37,2-35,2
NR4 EI 32/200A/A	32	440	469	85	344	286	190	105	126	126	60	-
NR4 EI 40/160A-B	40	320	430	81	349	286	190	105	119	119	75	37,9-37,4
NR4 EI 40/200B	40	440	430	81	349	286	190	105	140	140	75	45,9
NR4 EI 40/200A/A	40	440	470	81	349	286	190	105	140	140	75	49,4
NR4 EI 50/160B-C	50	340	440	90	350	286	190	105	120	128	75	41,9-39,9
NR4 EI 50/160A/B	50	340	480	90	350	286	190	105	120	128	75	43,9
NR4 EI 50/200A/B-B/B	50	440	516	100	416	294	190	105	140	140	80	62,4
NR4 EI 50/250C/B	50	440	516	100	416	294	190	105	175	175	85	83,9
NR4 EI 50/250A/A-B/B	50	440	545	100	445	368	210	118	175	175	85	101-86,4
NR4 EI 65/125D-F	65	340	454	105	349	286	190	105	121	145	95	45,4-43,4
NR4 EI 65/125S/B-A/B	65	340	494	105	349	286	190	105	121	145	95	48,4-48
NR4 EI 65/160A/B-B/B	65	340	504	105	399	294	190	105	121	142	95	49,1-48,9
NR4 EI 65/200C/B	65	475	536	105	431	294	190	105	140	153	90	58,4
NR4 EI 65/200B/B	65	475	536	105	431	294	190	105	140	153	90	66,4
NR4 EI 65/200A/B	65	475	552	105	447	368	210	118	175	175	90	70,9
NR4 EI 65/250C/B-D/B	65	475	555	105	450	365	210	118	175	175	90	81,9-81,9
NR4 EI 65/250A/A-B/A	65	475	555	105	450	368	210	118	175	175	90	105,5-92,5

Dimensions and weights

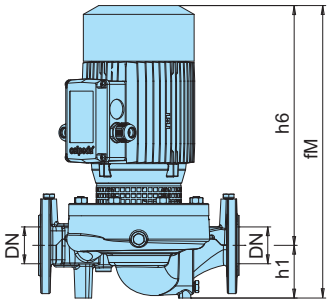

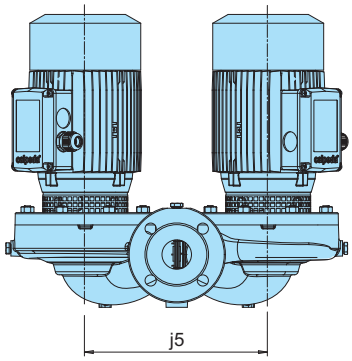

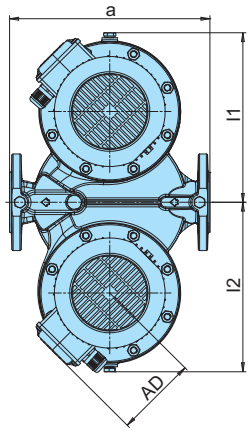

Flanges PN 10, EN 1092-2

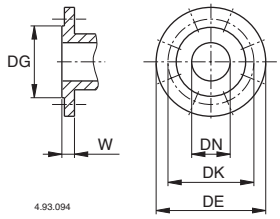

DN	mm					
	DG	DK	DE	Holes N°	Holes Ø	W
65	118	145	185	4	19	20

TYPE	mm									kg
	DN	a	fM	h1	h6	AD	j5	l1	l2	
NRD 65/125F	65	340	488,5	105	383,5	128	310	303,5	303,5	87,7
NRD 65/125A-D	65	340	514,5	105	409,5	138	310	303,5	303,5	106,3-99,3

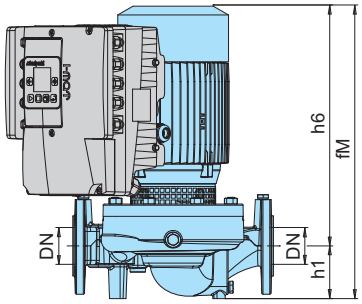

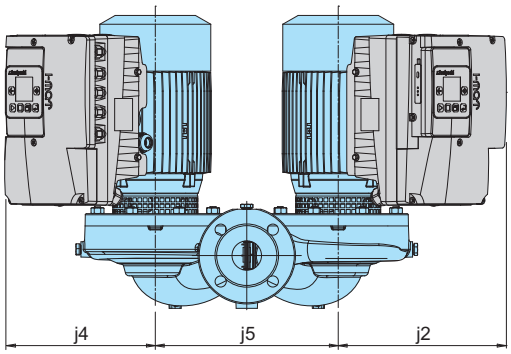

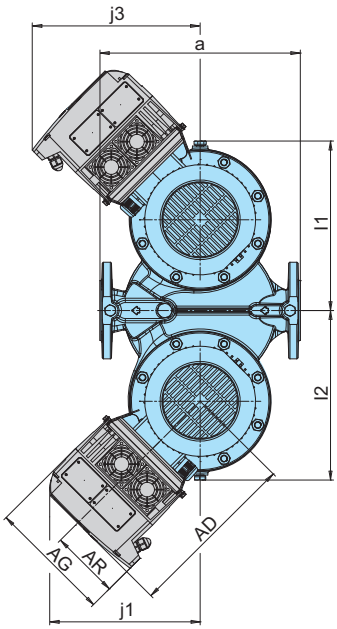

Flanges PN 10, EN 1092-2

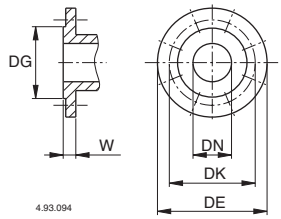

DN	mm					
	DG	DK	DE	Holes N°	Holes Ø	W
65	118	145	185	4	19	20

TYPE	mm															kg
	DN	a	fM	h1	h6	AD	AG	AR	j1	j2	j3	j4	j5	l1	l2	
NRD EI 65/125F	65	340	488,5	105	383,5	286	210	118	248	278	278	248	310	303,5	303,5	102,7
NRD EI 65/125A-D	65	340	514,5	105	409,5	294	210	118	255	285	285	255	310	303,5	303,5	121,3-114,3

Features

New Compact Design
A compact structure allows for simple installation even in confined spaces

A Unique Design
An innovative guard (patented) prevents contact with rotating parts, providing protection to the end user whilst allowing for inspection of the mechanical seal.

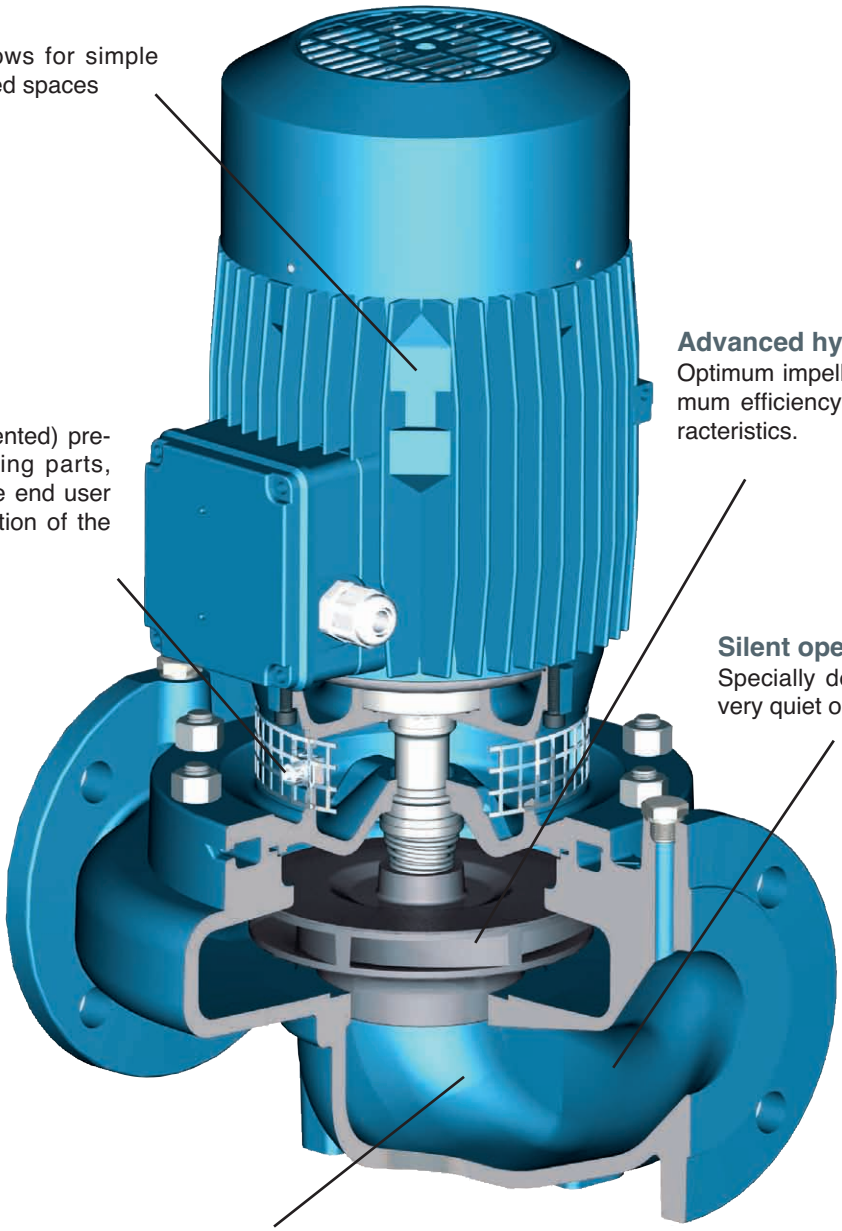

Advanced hydraulics
Optimum impeller geometry provides maximum efficiency and excellent suction characteristics.

Silent operation
Specially designed fluid ducts provide very quiet operation

Exceptional Fluid Dynamics
The fluid dynamics through the impeller and casing are designed to minimize losses and increase performance.

NC3

Three speeds circulating pumps with threaded ports

CANNOT BE SOLD IN THE EU

Construction

Pump casing with suction and delivery connections with the same diameter and on the same axis (in-line).
Brass or cast iron unions on request.

Component	Materials
Pump casing	Cast iron
Impeller	Composite
Shaft	Stainless steel AISI 420

Applications

For clean liquids, without abrasives, which are non-aggressive for the pump materials.
Civil and industrial heaty sistems.

Operating conditions

Liquid temperature from +5 °C to +110 °C (from -10 °C to +110 °C for NC3 ..-70 and NC3 ..-80-85-120).
Ambient temperature up to 40 °C.
Sound pressure ≤ 43 dB (A).
Maximum glycol quantity: 50% (Mixture with more than 20% glycol content require recheking of the pumping data).
Maximum permissible working pressure 10 bar.

TYPE	Minimum suction pressure: bar		
	Temperature		
	50 °C	80 °C	110 °C
NC3 ..-40,50,60	0,05	0,4	1,1
NC3 ..-70	0,05	0,4	1,1
NC3 ..-80,85,120	0,05	0,4	1,2

Motor

2-pole induction motor, 50 Hz.
Three adjustable speeds.
NC3: single-phase 230 V.
Insulation class H.
Protection IP 44.

Installation

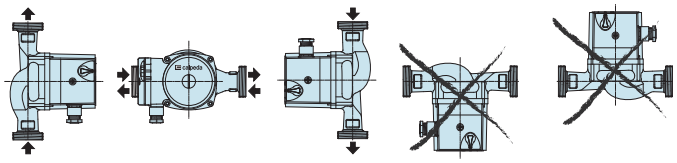

Unions

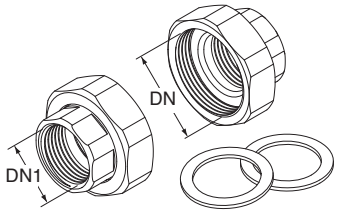

TYPE		DN	DN1
KIT G 1 - G 1/2	(NC3 15..)	G 1	G 1/2
KIT G 1 1/2 - G 1	(NC3 25..)	G 1 1/2	G 1
KIT G 2 - G 1 1/4	(NC3 32..)	G 2	G 1 1/4

Designation

NC3 32 - 70 / 180

- Series
- DN ports in mm
- Max. head in dm
- connection size mm

NC3

Three speeds circulating pumps with threaded ports

Characteristic curves, dimensions and weights

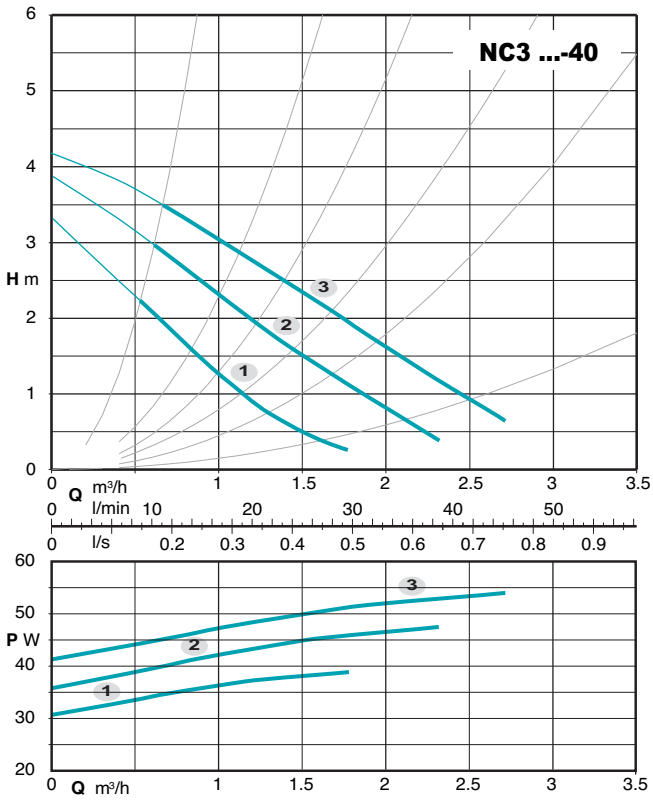

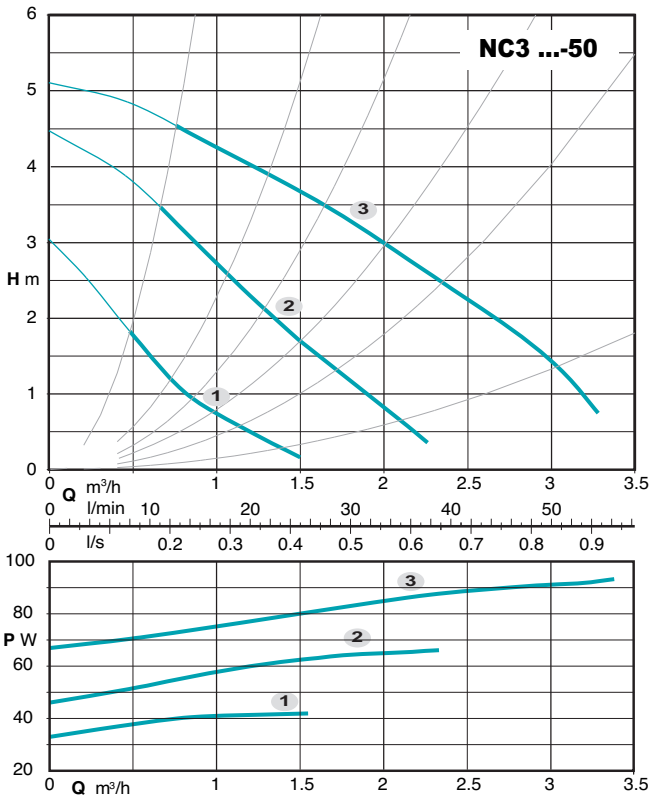

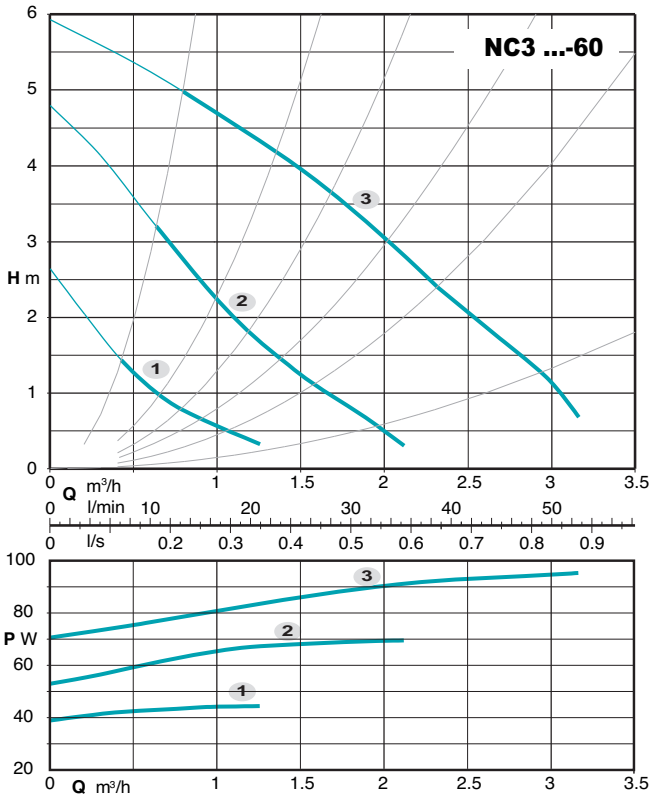

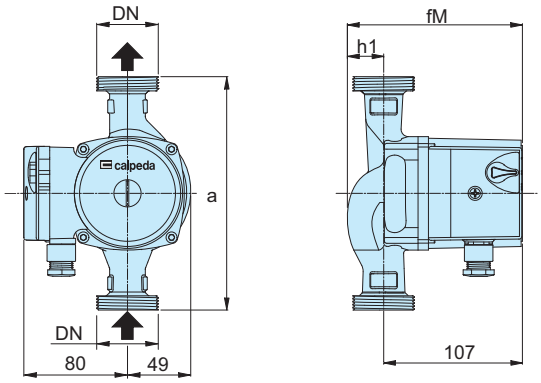

TYPE	DN	Pos.	P1 (W)	1x 230 V [A]	mm a	fM	h1	[kg]
NC3 15-40/130	G 1	3	53	0,23	130	128	21	2,2
NC3 25-40/130	G 1 1/2	2	47	0,21	130	135	28	2,4
NC3 25-40/180	G 1 1/2	1	38	0,17	180	135	28	2,6
NC3 15-50/130	G 1	3	91	0,38	130	128	21	2,2
NC3 25-50/130	G 1 1/2	2	65	0,28	130	135	28	2,4
NC3 25-50/180	G 1 1/2	1	42	0,18	180	135	28	2,6
NC3 32-50/180	G 2				180	138	31	3
NC3 15-60/130	G 1	3	95	0,41	130	128	21	2,2
NC3 25-60/130	G 1 1/2	2	70	0,30	130	135	28	2,4
NC3 25-60/180	G 1 1/2	1	44	0,20	180	135	28	2,6
NC3 32-60/180	G 2				180	138	31	3

NC3

Three speeds circulating pumps with threaded ports

Characteristic curves, dimensions and weights

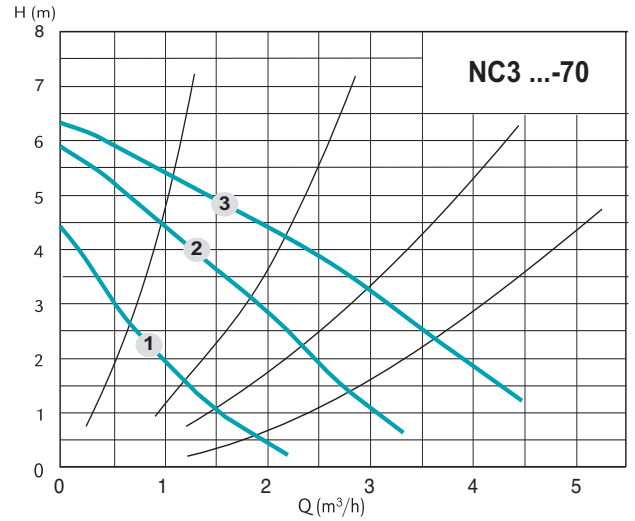

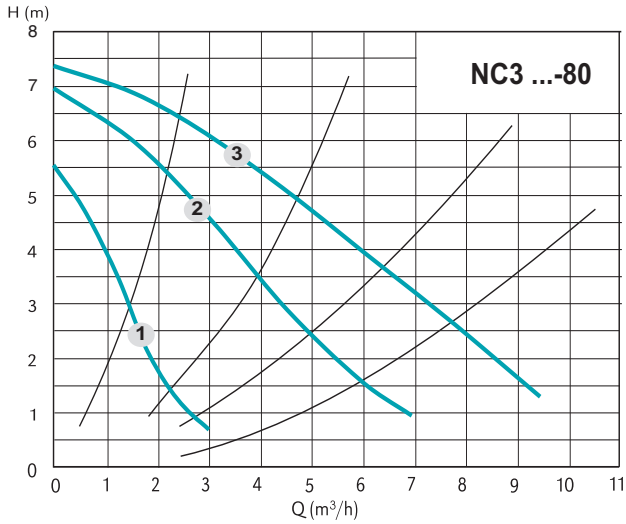

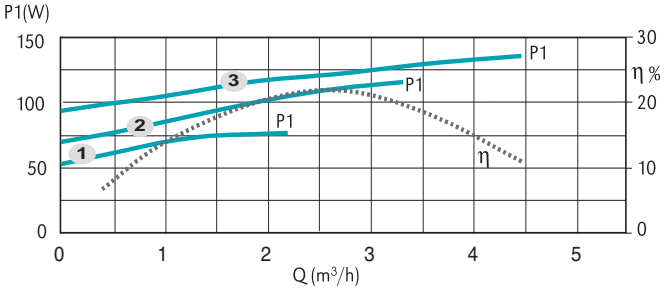

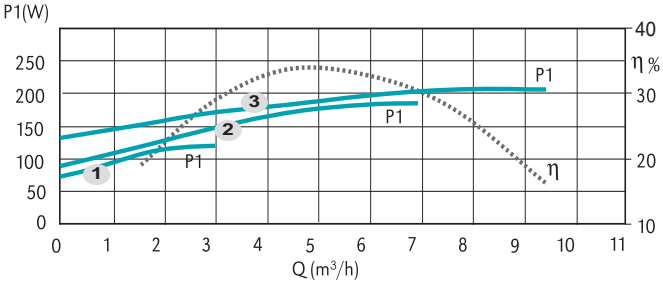

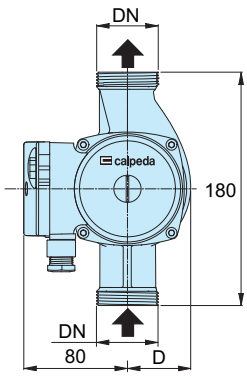

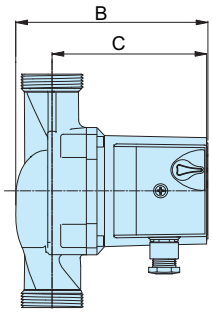

TYPE	DN	Pos.	P1 (W)	1x 230 V [A]	[mm] B	C	D	[kg]
NC3 25-70/180	G 1 1/2	3 2 1	136 116 77	0,61 0,54 0,37	135	107	49	2,9
NC3 32-70/180	G 2	3 2 1	136 116 77	0,61 0,54 0,37	138	107	49	3,1
NC3 32-80/180	G 2	3 2 1	206 185 120	0,91 0,88 0,60	185	143	58	4,7

NC3

Three speeds circulating pumps with threaded ports

Characteristic curves, dimensions and weights

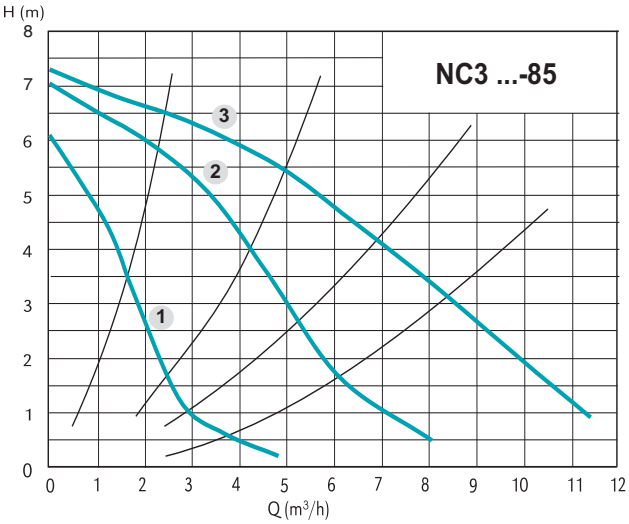

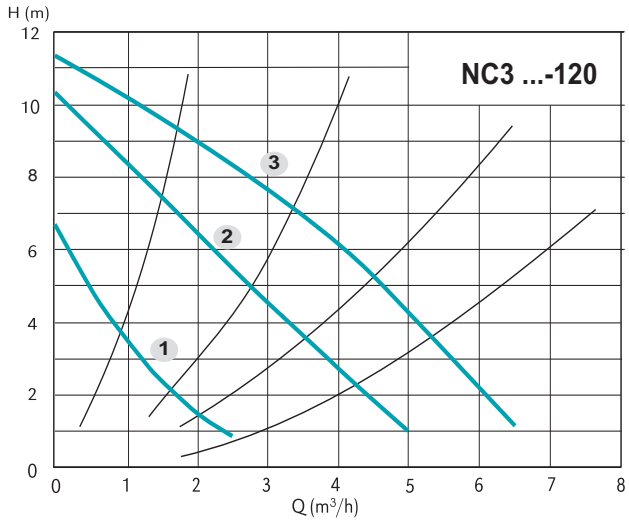

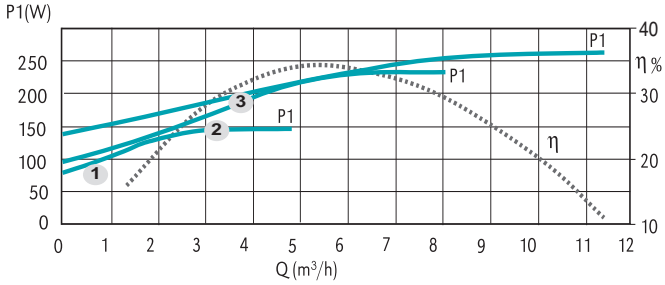

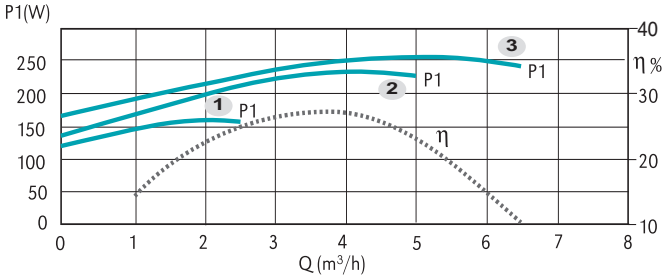

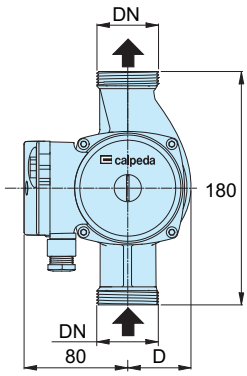

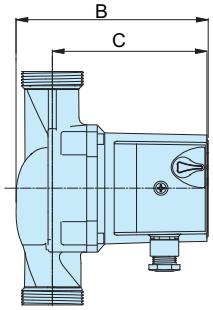

TYPE	DN	Pos.	P1 (W)	1x 230 V [A]	[mm] B	C	D	[kg]
NC3 32-85/180	G 2	3 2 1	277 250 172	1,2 1,16 0,85	185	143	58	4,9
NC3 32-120/180	G 2	3 2 1	265 251 176	1,15 1,14 0,85	208	174	68	5,2

NCE(D) HQ.F

Energy saving twin circulating pumps with flanges

ErP READY 2015 — APPLIES TO EUROPEAN DIRECTIVE FOR ENERGY RELATED PRODUCTS

Construction

Energy saving variable speed circulating pump driven by a permanent magnet synchronous motor (pm) controlled by on board inverter.

Digital input and output:
- Modbus (NCE HQ on request)
- Eternet (NCE HQ on request)
- analog input 0-10V
- remote on/off input
- output relay

Applications

Heating and conditioning systems.

Operating conditions

- Liquid temperature from +2 °C to +110 °C
- Ambient temperature from 0 °C to +40 °C
- Maximum permissible working pressure: 10 bar
- Storage: -20°C/+70°C max. relative humidity 95% at 40 °C
- Certifications: in conformity with CE requirements
- Sound pressure ≤ 40 dB (A).
- Minimum suction pressure: - 0,05 bar at 75 °C
  - 0,28 bar a 90 °C.
- Maximum glycol quantity: 20%.
- EMC according to: EN 55014-1, EN 55014-2
  EN 61000-3-2, EN 61000-3-2.
- Connections: Flanges according to PN 6/10, EN 1092-2, DN 32,40,50,65,80,100.
- The benchmark for most efficient circulators is EEI ≤ 0,20.

Designation

NCE (D) HQ 40 F - 120 / 220

- Series
- Twin pumps version
- Version
- DN ports in mm
- With flanges
- Max. head in dm
- connection size mm

Motor

Synchronous motor with permanent magnet.
- Motor: variable speed
- Standard voltage: single-phase 230 V (-10%;+6%)
- Frequency: 50/60 Hz
- Protection: IP 44
- Insulation class: F
- Overload protection (integrated).
- Cable: phases and neutral.
- Constructed in accordance with: EN 60335-1, EN 60335-2-51.

Features

Smart pump

NCE(D) HQ.F adapt its functions to the system: the circulator measures the pressure and the flow and adjusts the speed to the selected pressure.

Easy use

There are different operating modes selectable from the control panel.

NCE(D) HQ.F

Energy saving twin circulating pumps with flanges

Operating modes

Automatic mode
(factory setting):
In this mode the pump automatically sets the operating pressure, depending on the hydraulic system. This mode is recommended in most systems.

Proportional pressure mode:
The circulator changes the pressure propotionally to the current flow.
The pressure value can be adjusted with the + and – buttons.

Constant pressure mode:
The circulator mantains the pressure constant when the reference flow changes.
The pressure value can be adjusted with the + and – buttons.

Fixed speed mode:
The circulator works with constant curve and the curve could be changed using + e – buttons.

Night mode:.
When the liquid temperature fall by 15-20°C the pump automatically swiches to night mode, in practice the circulator works at minimum curve.
When the temperature rises again the pump comes back to the selected mode
The night mode could be selected with any operating mode.

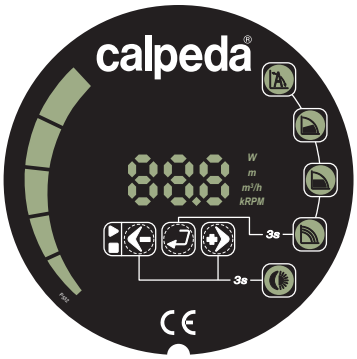

Operating mode-control panel

NCE HQ.F could works in:
- automatic mode
- proportional pressure mode
- constant pressure mode
- fixed speed mode
- night mode

The night mode could be selected with any operating mode.

Coverage chart

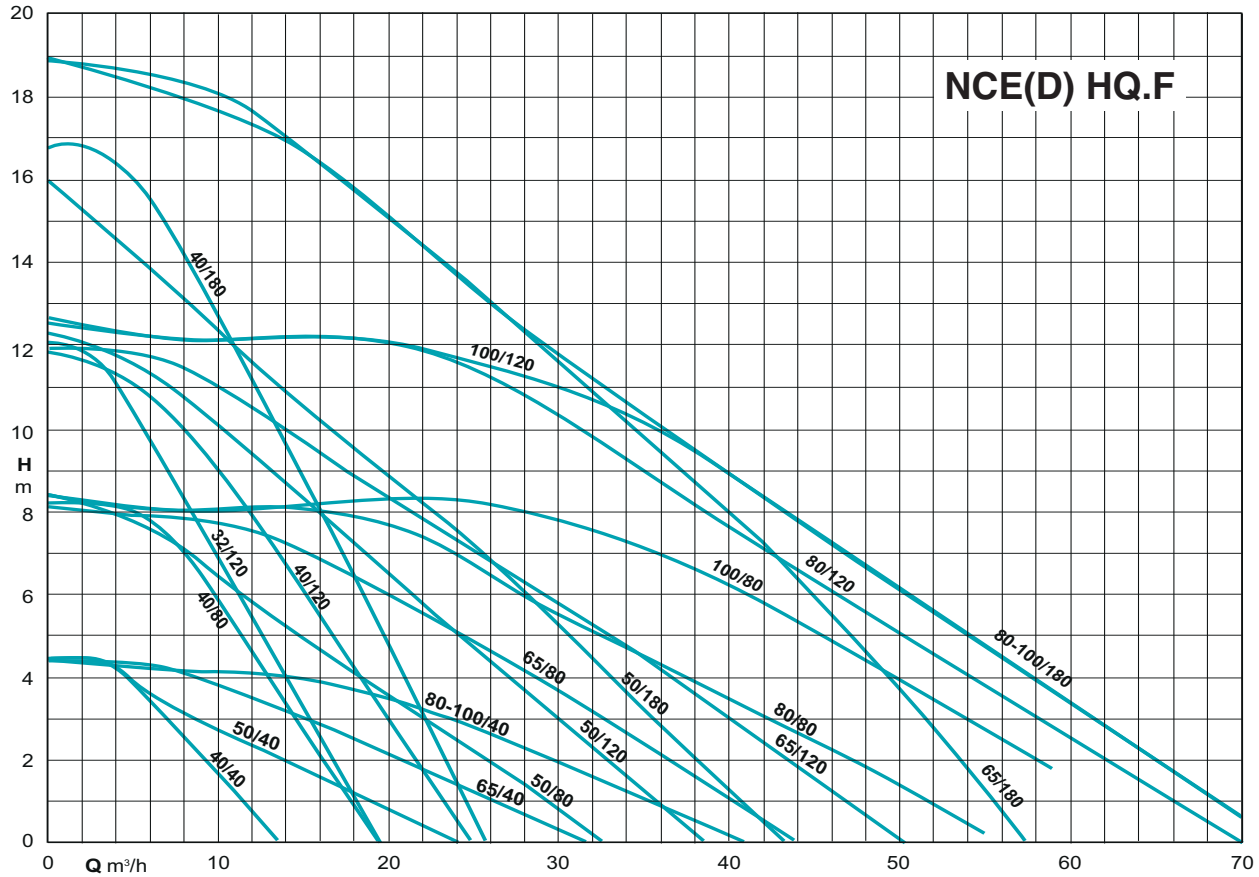

Characteristic curves

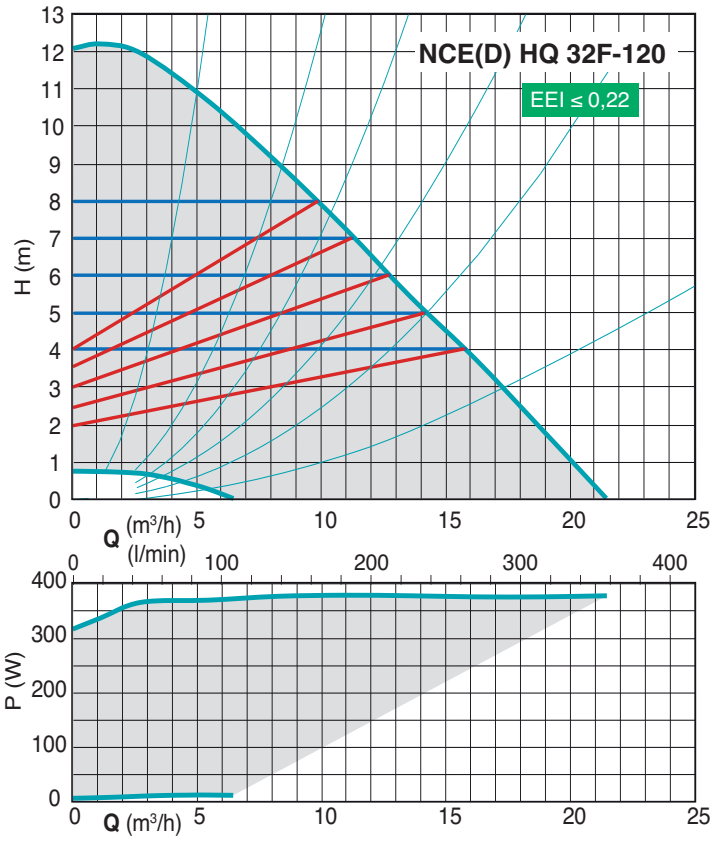

NCE(D) HQ.F

Energy saving twin circulating pumps with flanges

calpeda

Characteristic curves

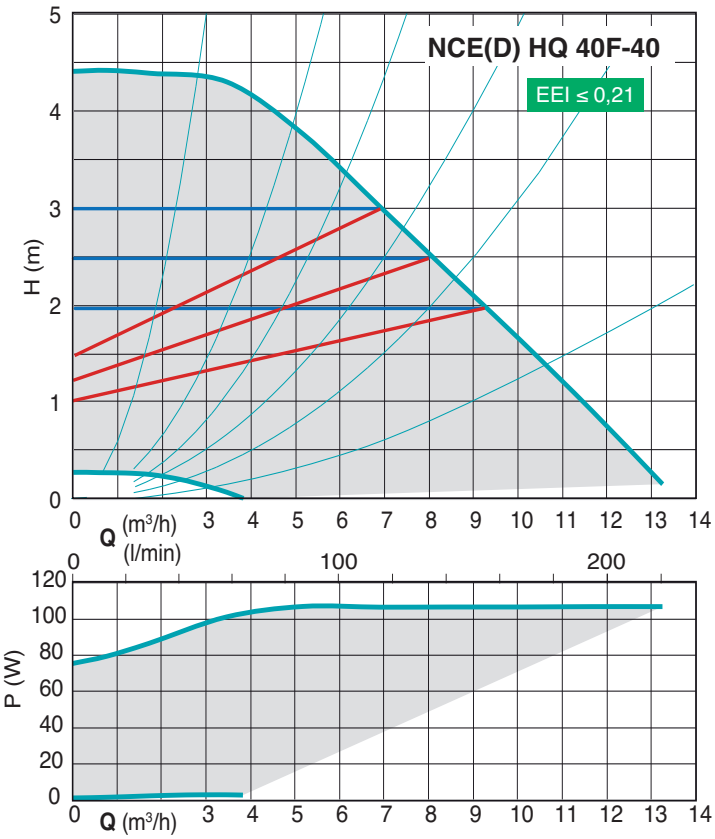

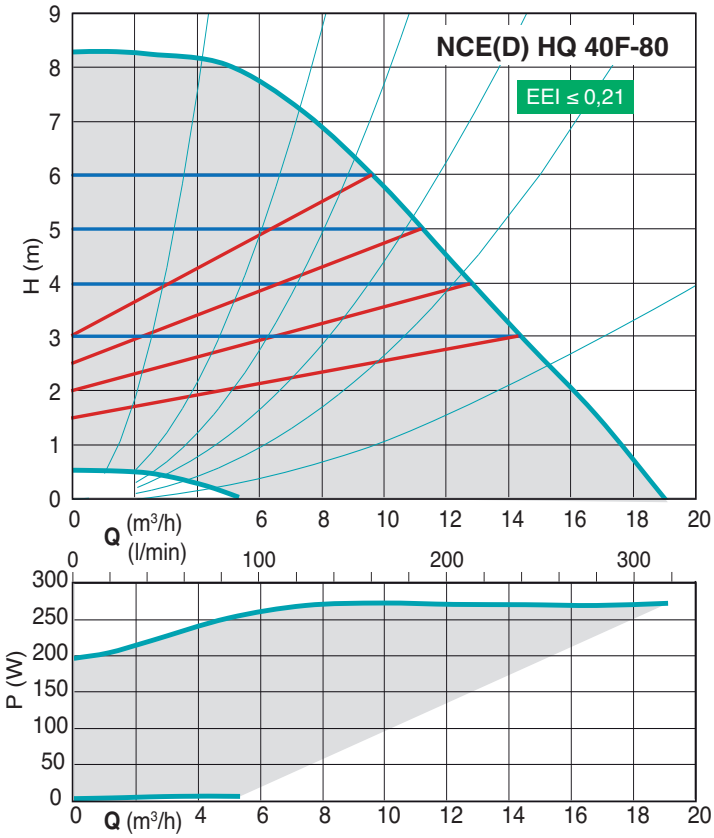

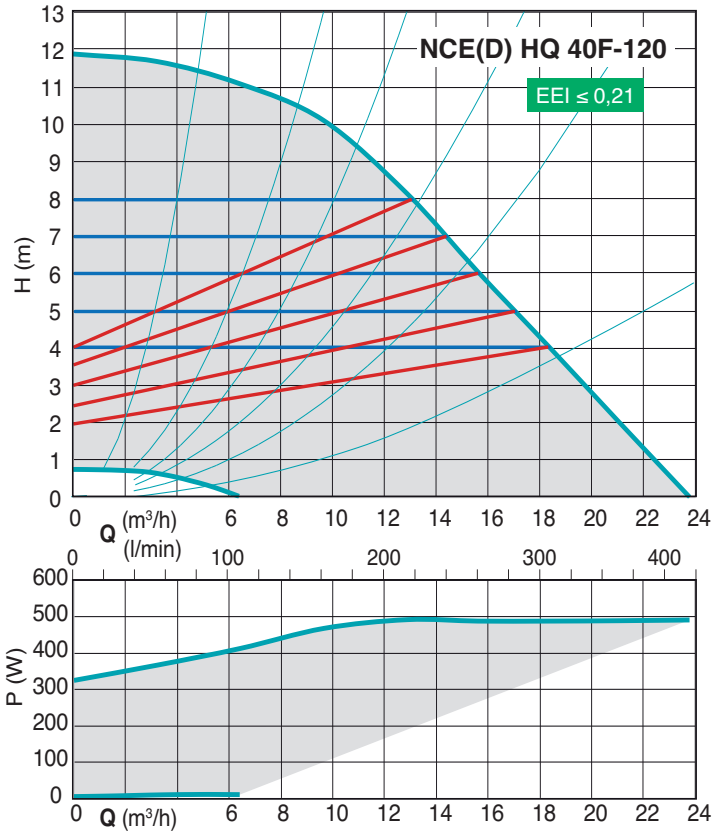

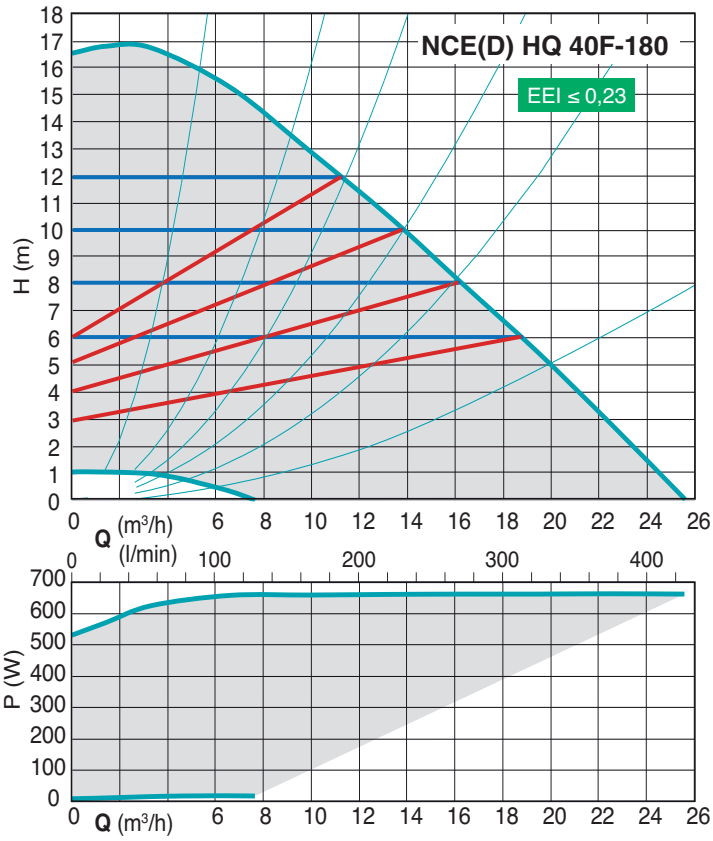

NCE(D) HQ.F

Energy saving twin circulating pumps with flanges

calpeda

Characteristic curves

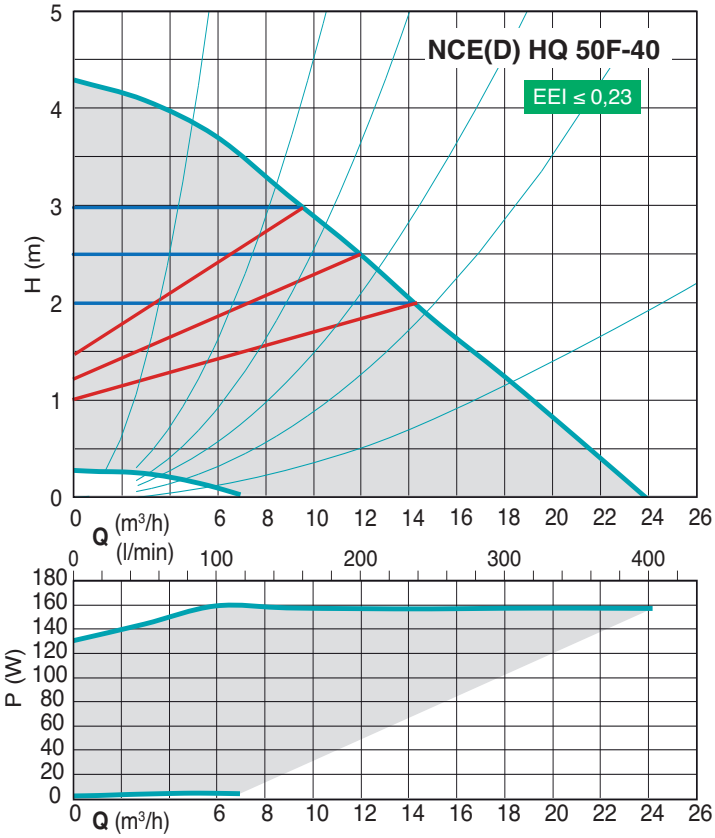

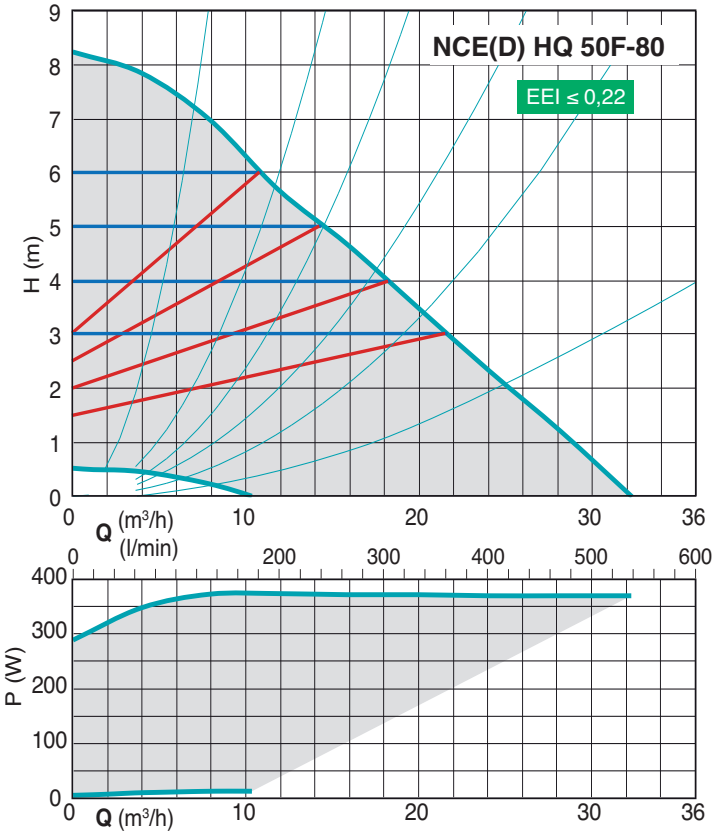

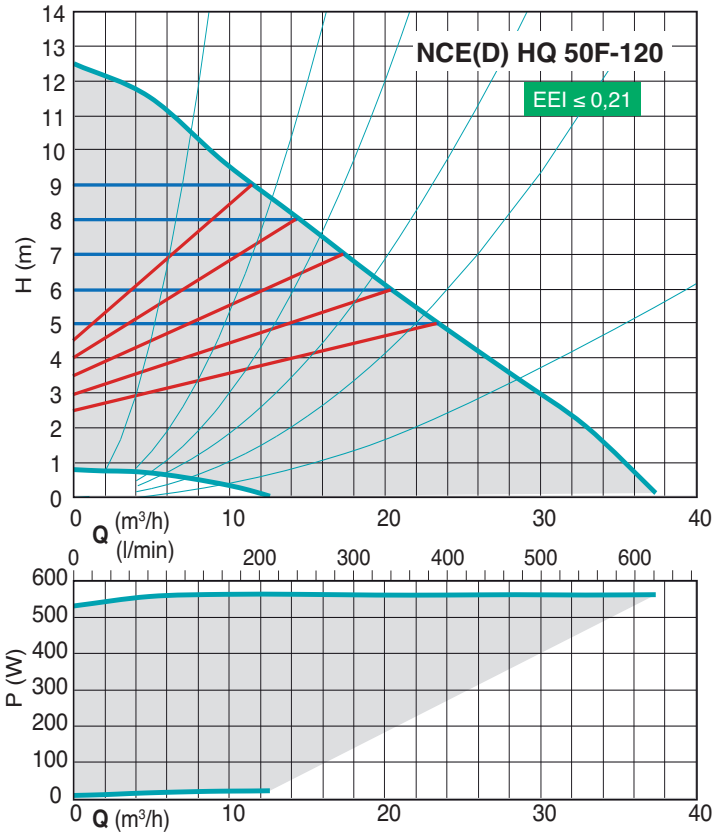

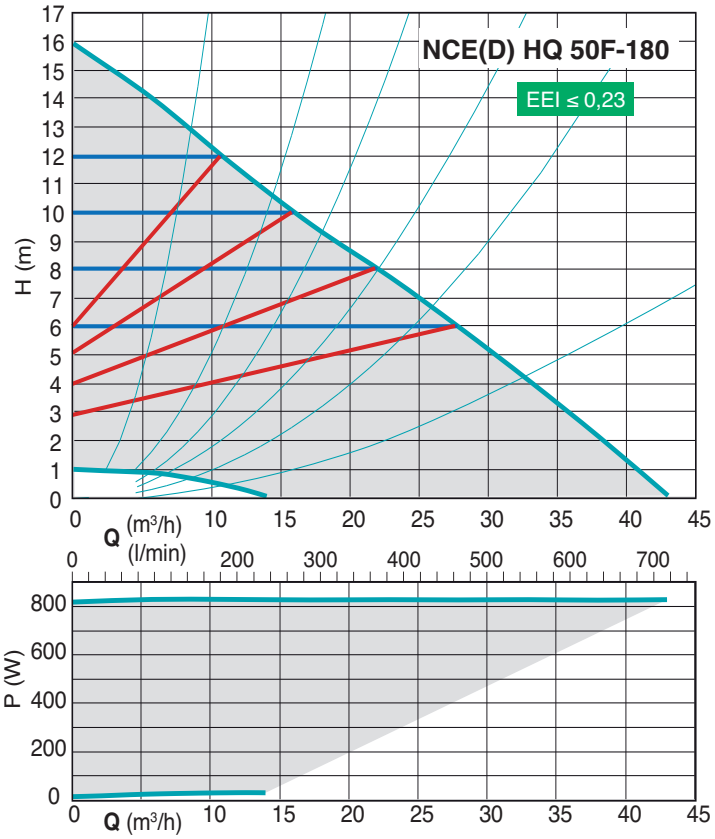

NCE(D) HQ.F

Energy saving twin circulating pumps with flanges

calpeda

Characteristic curves

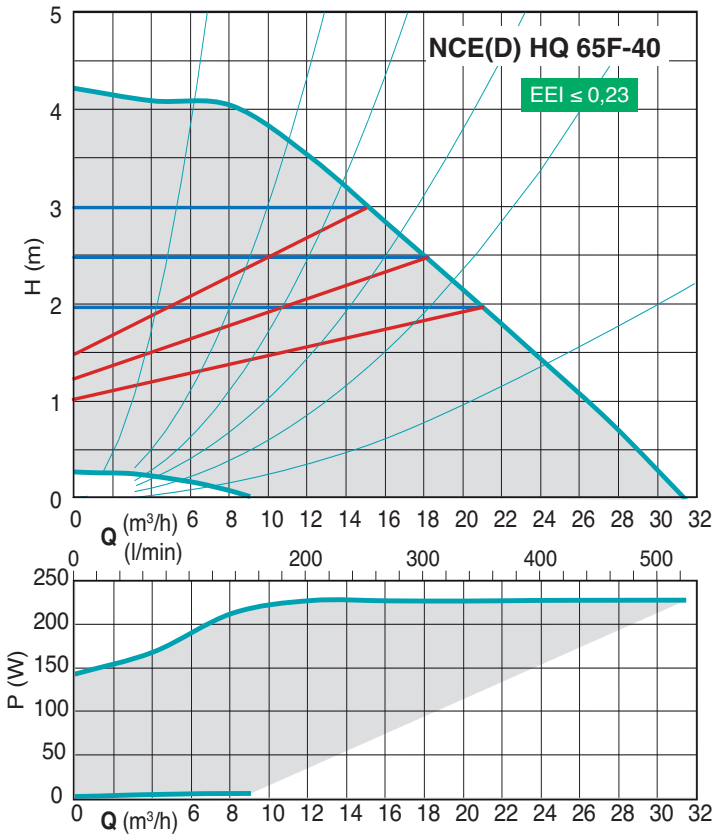

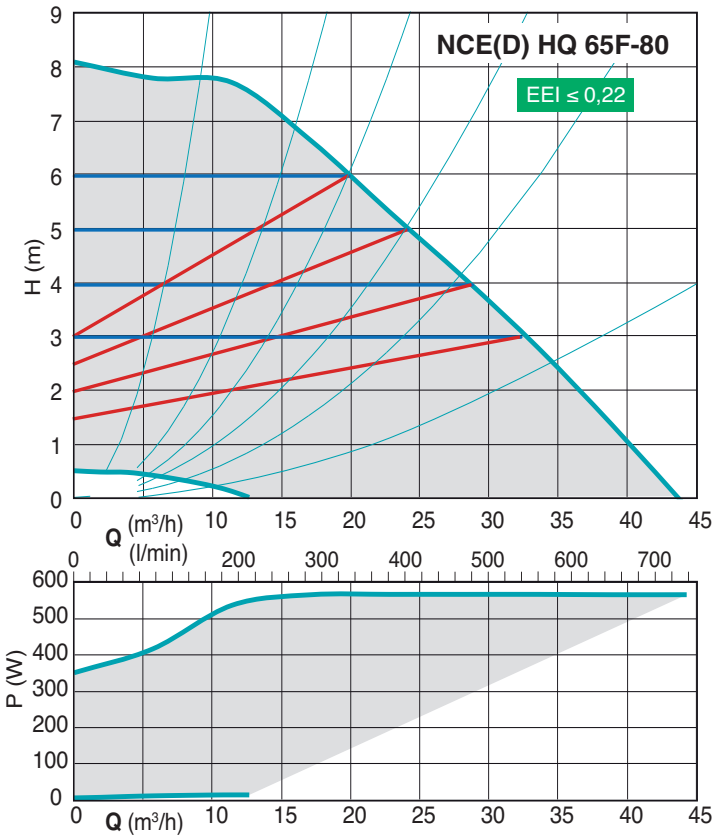

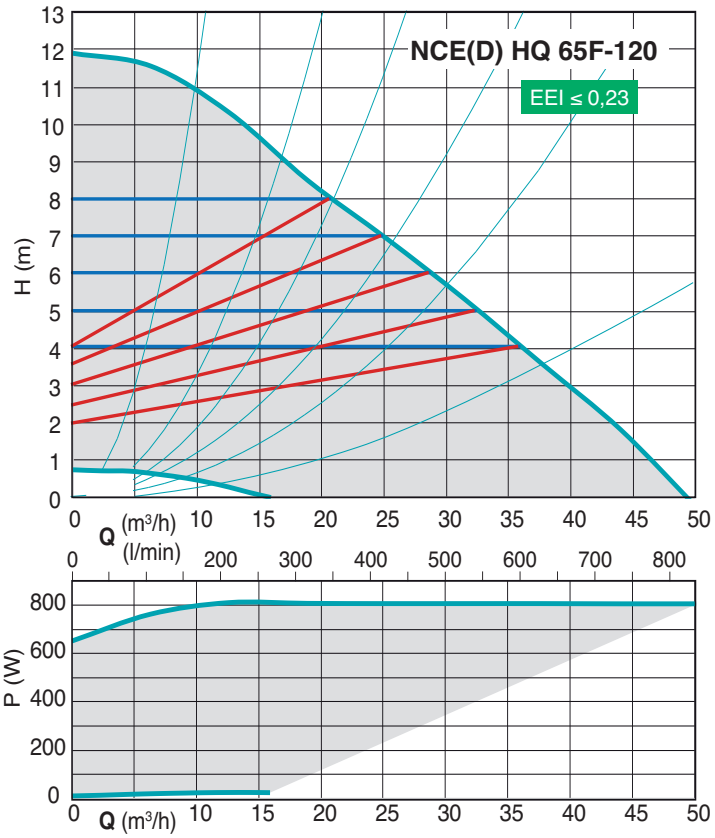

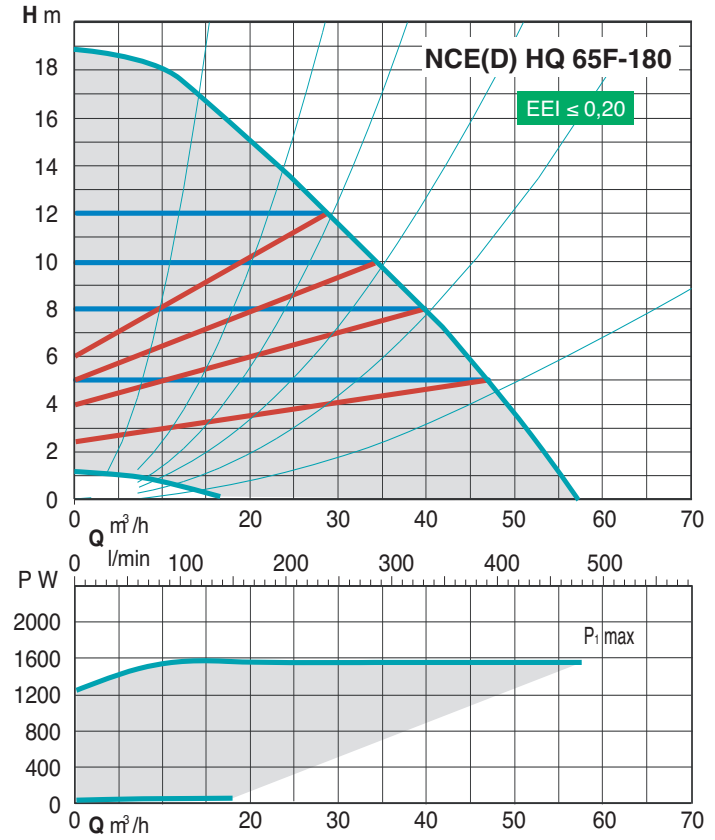

NCE(D) HQ.F

Energy saving twin circulating pumps with flanges

calpeda

Characteristic curves

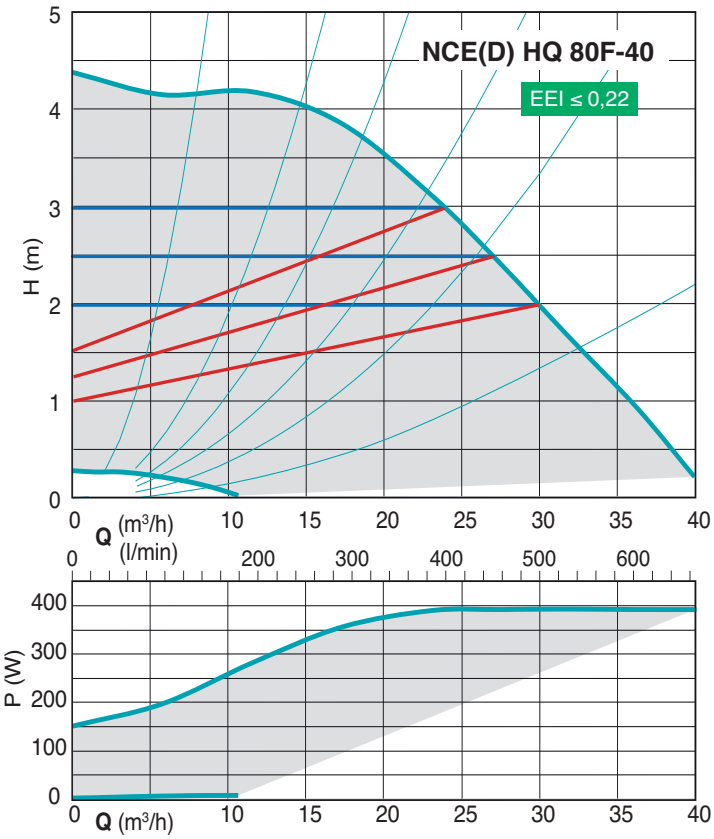

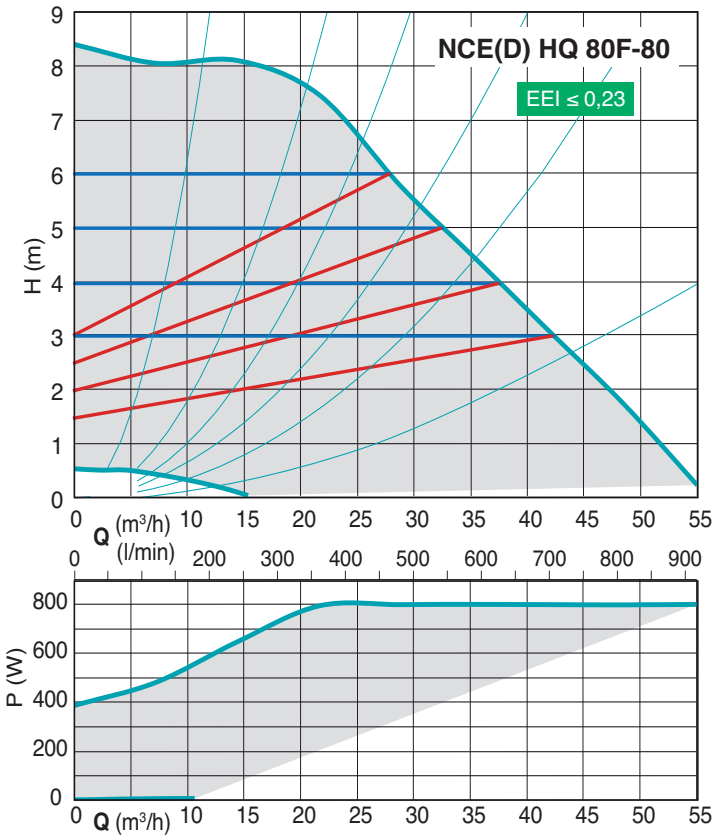

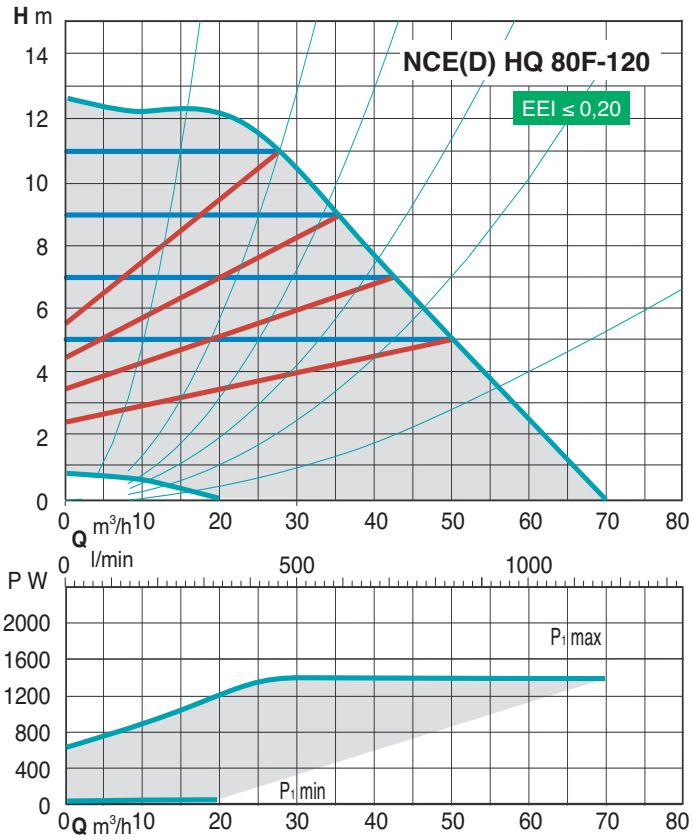

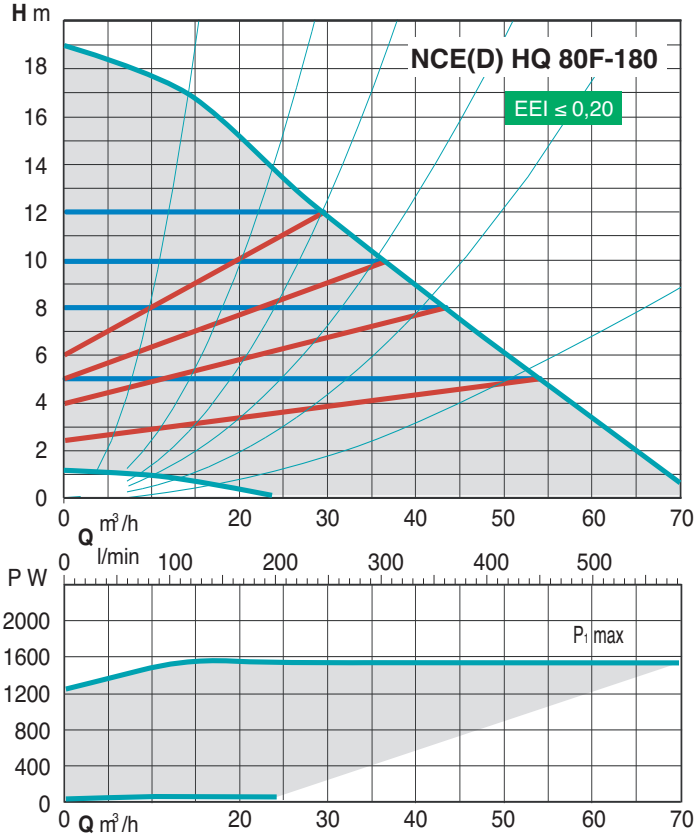

NCE(D) HQ.F

Energy saving twin circulating pumps with flanges

calpeda

Characteristic curves

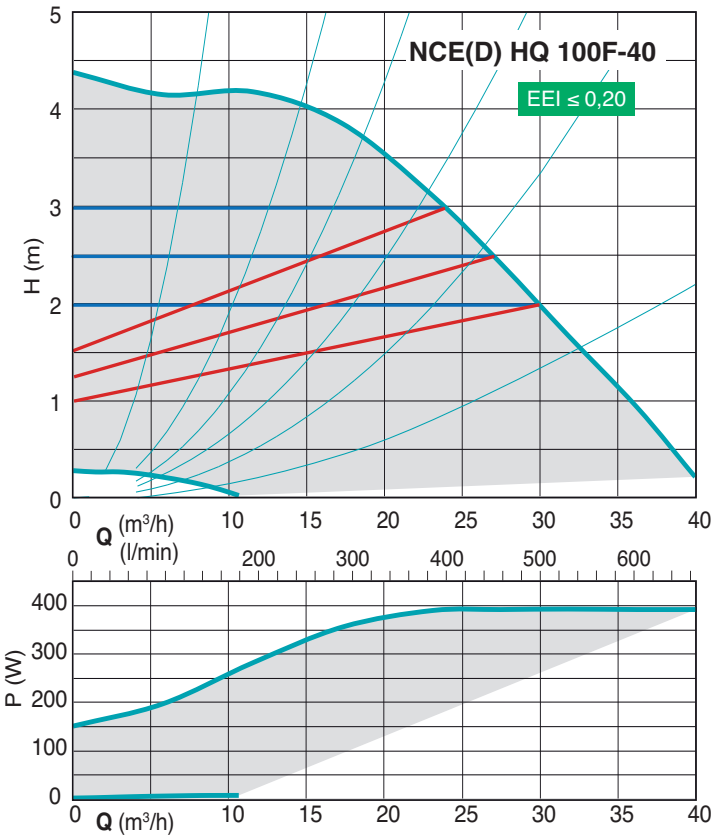

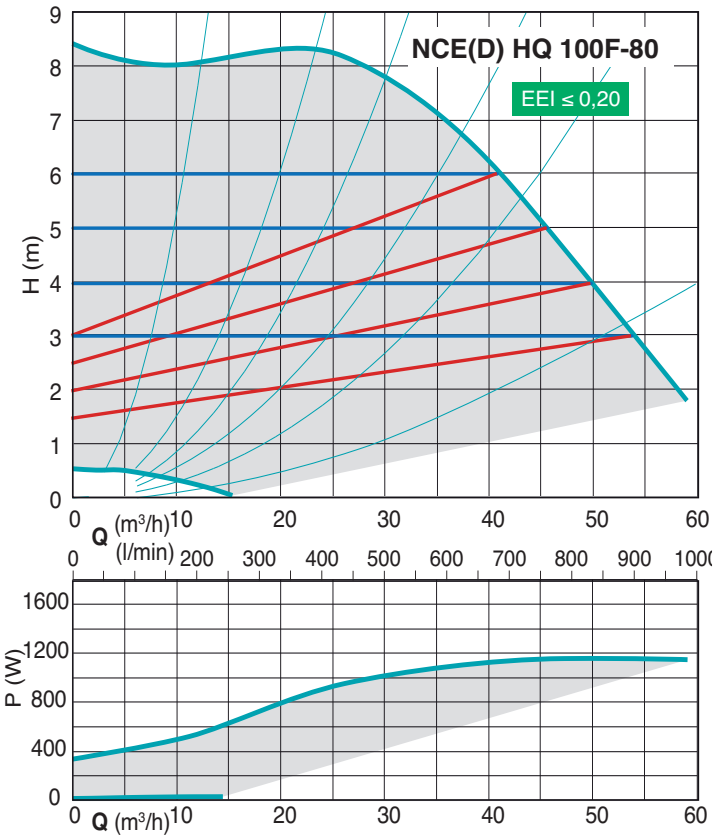

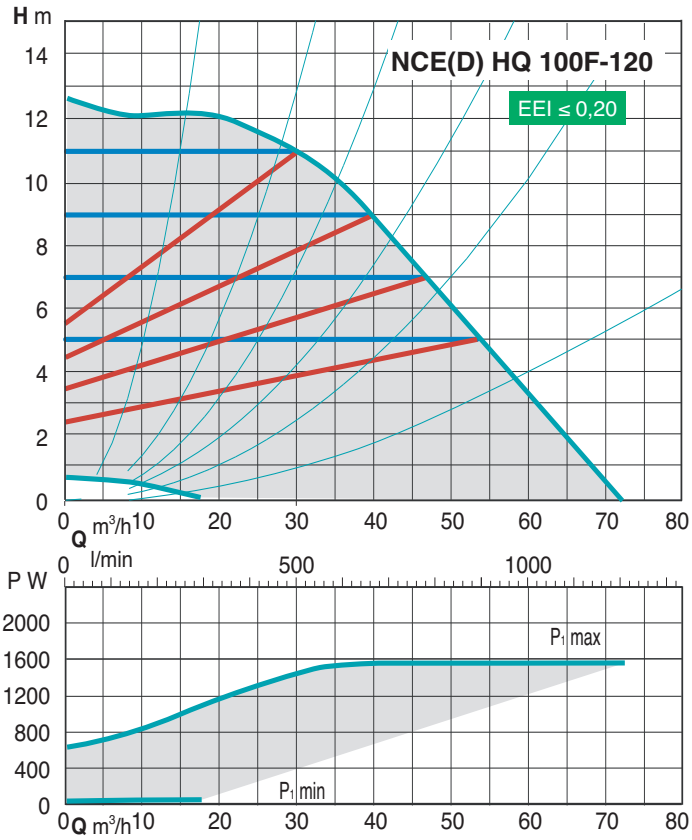

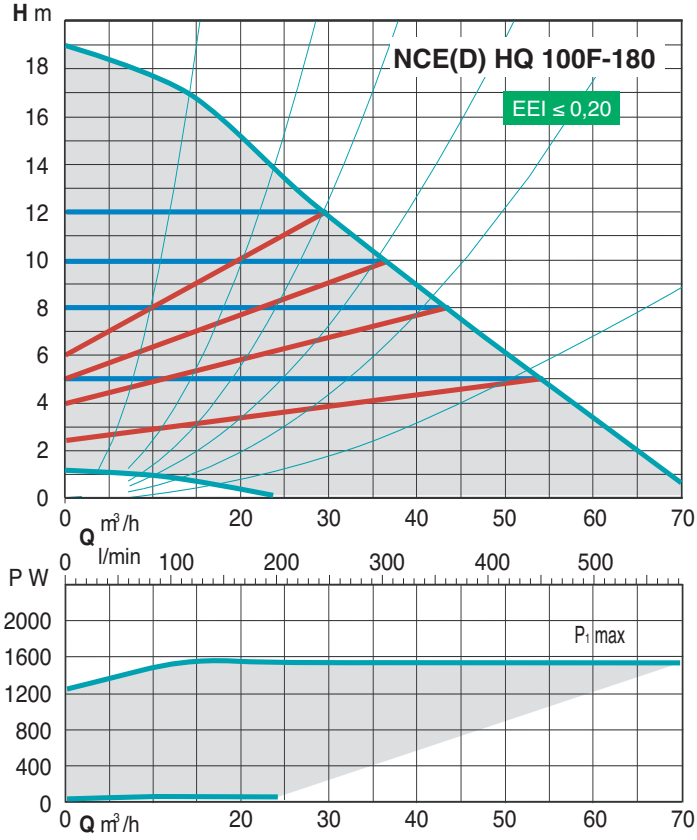

Materials

Component	Pos.	Material
Pump casing	1	Cast iron GJL 200 EN 1561
Impeller	2	Composite
Shaft	3	Stainless steel
Bearings	4	Carbon
Thrust bearing	5	Ceramic
Rotor	6	Stainless steel jacket
Winding	7	Copper wire
Electronic card	8	-
Gasket	9	EPDM

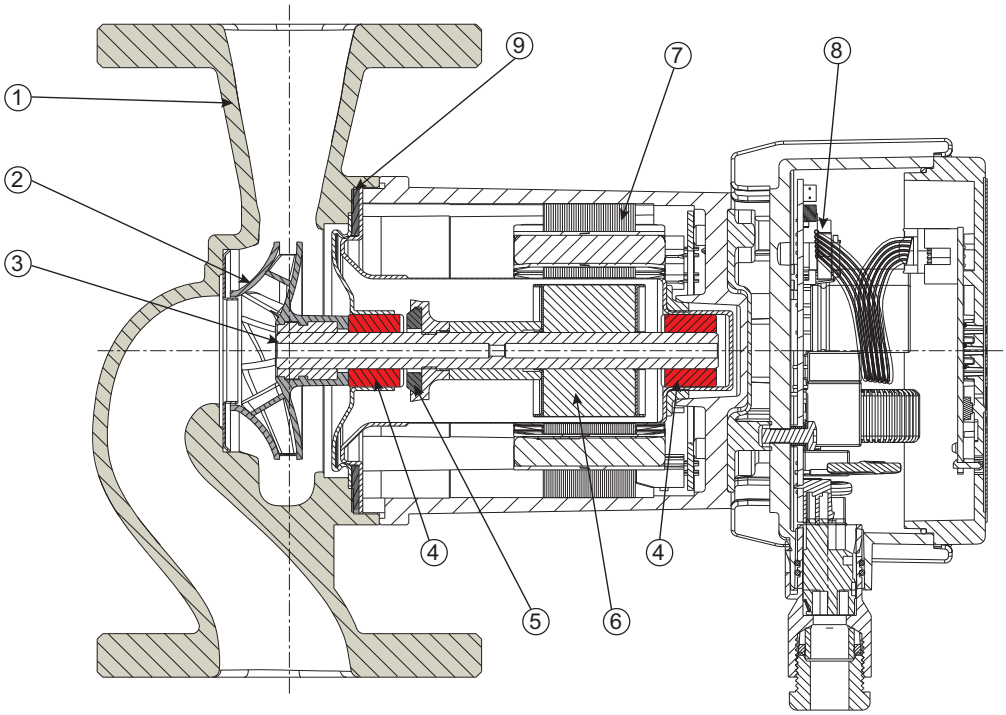

NCE HQ.F

Energy saving circulating pumps with flanges

calpeda

Dimensions and weights

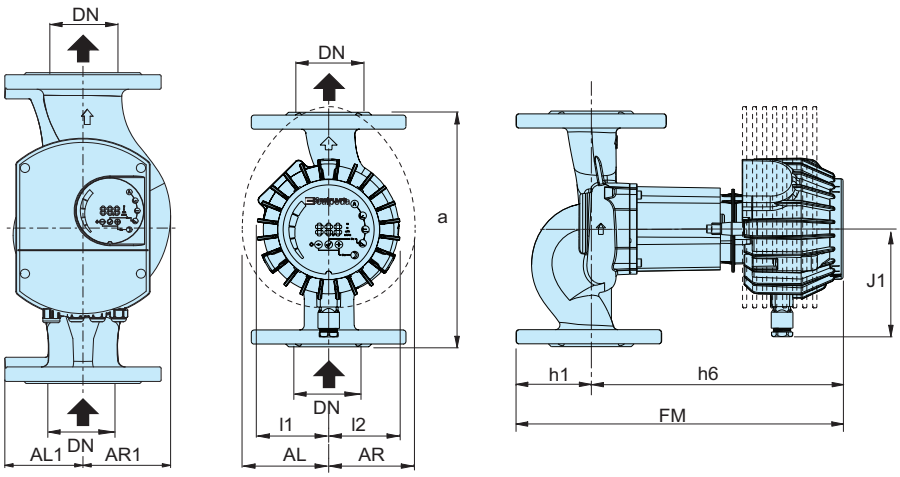

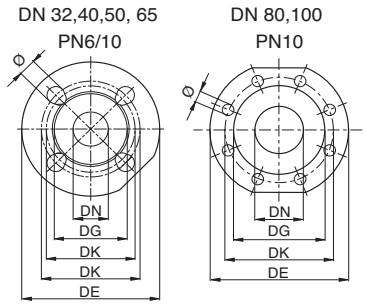

DN	DE	DK	DG	holes N.	holes Ø
32	140	90/100	74	4	14/19
40	150	100/110	80	4	14/19
50	165	110/125	90	4	14/19
65	185	130/145	110	4	14/19
80	200	160	148	8	19
100	220	180	166	8	19

TYPE	DN	H m	Q m³/h	1~ 230 V A max	P1 W max	mm a	J1	FM	h1	h6	l1	l2	AL	AR	AL1	AR1	kg
NCE HQ 32F-120/220	32	12	19	1.8	370	220	115	330	65	265	75	75	-	-	-	-	9,1
NCE HQ 40F-40/250	40	4	13	1	110	250	99	270	65	205	59	74	-	-	-	-	8,2
NCE HQ 40F-80/250	40	8	19	1.3	270	250	115	330	65	265	75	75	-	-	-	-	9,6
NCE HQ 40F-120/250	40	12	24	2.3	480	250	115	330	65	265	75	75	-	-	-	-	9,95
NCE HQ 40F-180/250	40	18	25	3.4	680	250	115	330	65	265	-	-	90	90	-	-	14,2
NCE HQ 50F-40/280	50	4	23	1.3	160	280	99	313	65	241	74	92	-	-	-	-	10,8
NCE HQ 50F-80/280	50	8	32	1.7	370	280	115	373	72	301	75	92	-	-	-	-	12,35
NCE HQ 50F-120/280	50	12	36	2.5	560	280	115	373	72	301	75	92	-	-	-	-	13
NCE HQ 50F-180/280	50	18	42	3.6	830	280	115	383	72	311	-	-	92	90	-	-	15,9
NCE HQ 65F-40/340	65	4	31	1.1	230	340	115	386	75	311	83	100	-	-	-	-	15,95
NCE HQ 65F-80/340	65	8	43	2.6	560	340	115	386	75	311	83	103	-	-	-	-	16,65
NCE HQ 65F-120/340	65	12	50	3.5	810	340	115	397	75	322	-	103	90	-	-	-	19,3
NCE HQ 65F-180/340	65	18	57	6,6	1550	340	137	434	75	359	-	-	-	-	94,5	104	-
NCE HQ 80F-40/360	80	4	40	1.8	390	360	115	414	93	321	98	123	-	-	-	-	23,4
NCE HQ 80F-80/360	80	8	53	3.5	800	360	115	425	93	332	98	123	-	-	-	-	25,8
NCE HQ 80F-120/360	80	12	69	6,0	1400	360	137	462	93	369	-	-	-	-	98,5	124	-
NCE HQ 80F-180/360	80	18	72	6,6	1550	360	137	462	93	369	-	-	-	-	98,5	124	-
NCE HQ 100F-40/450	100	4	40	2.4	550	450	115	424	103	321	98	123	-	-	-	-	-
NCE HQ 100F-80/450	100	8	59	4,7	1150	450	137	472	103	369	-	-	-	-	110	124	-
NCE HQ 100F-120/450	100	12	72	6,6	1550	450	137	472	103	369	-	-	-	-	110	124	-
NCE HQ 100F-180/450	100	18	72	6,6	1550	450	137	472	103	369	-		-	-	110	124	-

Examples of installations

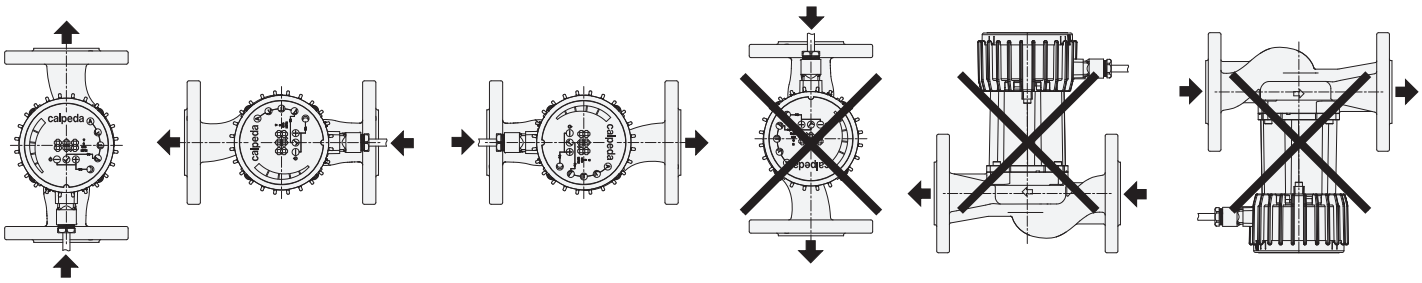

NCE(D) HQ.F

Energy saving twin circulating pumps with flanges

calpeda

Dimensions and weights

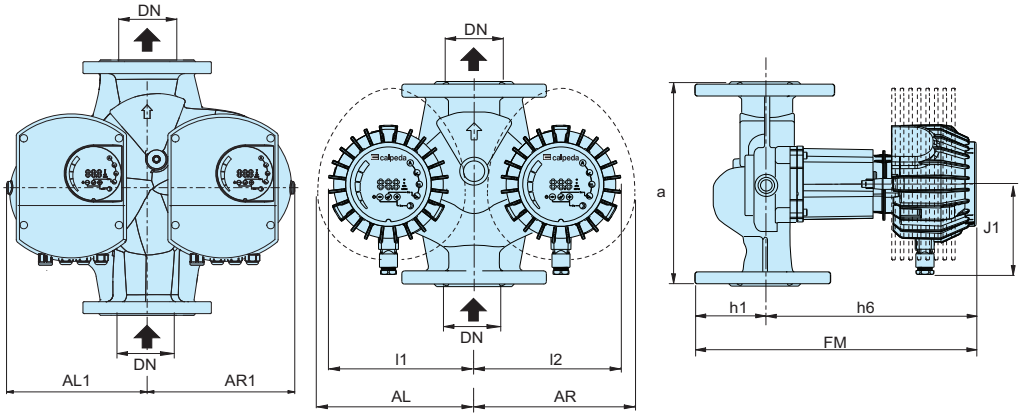

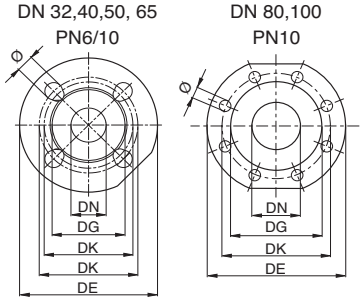

DN	DE	DK	DG	holes N.	holes Ø
32	140	90/100	74	4	14/19
40	150	100/110	80	4	14/19
50	165	110/125	90	4	14/19
65	185	130/145	110	4	14/19
80	200	160	148	8	19
100	220	180	166	8	19

TYPE	DN	H m	Q m^3/h	1~ 230 V A max	P_1 W max	a	J1	FM	h1	h6	l1	l2	AL	AR	AL1	AR1	kg
						mm											
NCED HQ 32F-120/220	32	12	19	1.8	370	220	115	330	65	265	-	-	185	186	-	-	-
NCED HQ 40F-40/250	40	4	13	1	110	250	99	270	65	205	181	186	-	-	-	-	14,3
NCED HQ 40F-80/250	40	8	19	1.3	270	250	115	330	65	265	-	-	185	186	-	-	16,7
NCED HQ 40F-120/250	40	12	24	2.3	480	250	115	330	65	265	-	-	185	186	-	-	16,9
NCED HQ 40F-180/250	40	18	25	3.4	680	250	115	390	65	325	-	-	200	200	-	-	25
NCED HQ 50F-40/280	50	4	23	1.3	160	280	99	313	72	241	199	200	-	-	-	-	19,6
NCED HQ 50F-80/280	50	8	32	1.7	370	280	115	373	72	301	199	200	-	-	-	-	22,4
NCED HQ 50F-120/280	50	12	36	2.5	560	280	115	373	72	301	199	200	-	-	-	-	23,6
NCED HQ 50F-180/280	50	18	42	3.6	830	280	115	373	72	311	-	203	200	-	-	-	28,8
NCED HQ 65F-40/340	65	4	31	1.1	230	340	115	384	75	309	216	226	-	-	-	-	32,2
NCED HQ 65F-80/340	65	8	43	2.6	560	340	115	384	75	309	216	226	-	-	-	-	32,7
NCED HQ 65F-120/340	65	12	50	3.5	810	340	115	395	75	320	216	226	-	-	-	-	38,4
NCED HQ 65F-180/340	65	18	57	6,6	1550	340	137	432	75	357	-	-	-	-	216	226	-
NCED HQ 80F-40/360	80	4	40	1.8	390	360	115	414	93	321	241	253	-	-	-	-	-
NCED HQ 80F-80/360	80	8	53	3.5	800	360	115	425	93	332	241	253	-	-	-	-	-
NCED HQ 80F-120/360	80	12	69	6,0	1400	360	137	462	93	369	-	-	-	-	241	253	-
NCED HQ 80F-180/360	80	18	72	6,6	1550	360	137	462	93	369	-	-	-	-	241	253	-
NCED HQ 100F-40/450	100	4	40	2.4	550	450	115	424	103	321	241	253	-	-	-	-	-
NCED HQ 100F-80/450	100	8	59	4,7	1150	450	137	472	103	369	-	-	-	-	241	253	-
NCED HQ 100F-120/450	100	12	72	6,6	1550	450	137	472	103	369	-	-	-	-	241	253	-
NCED HQ 100F-180/450	100	18	72	6,6	1550	450	137	472	103	369	-	-	-	-	241	253	-

Examples of installations

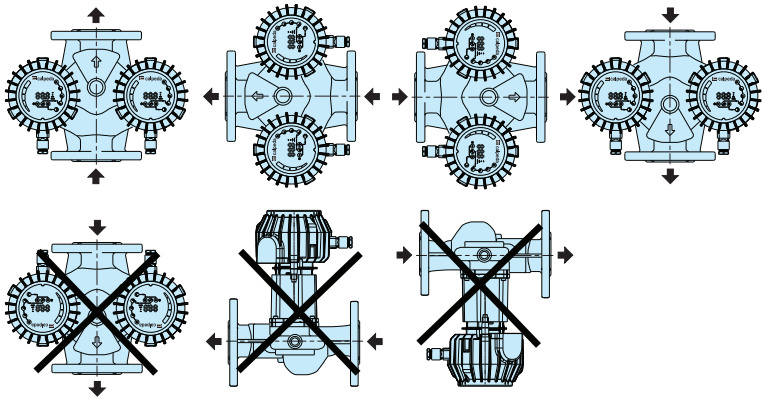

NCE(D) HQ.F

Energy saving twin circulating pumps with flanges

ErP READY 2015 — APPLIES TO EUROPEAN DIRECTIVE FOR ENERGY RELATED PRODUCTS

Construction

Energy saving variable speed circulating pump driven by a permanent magnet synchronous motor (pm) controlled by on board inverter.

Digital input and output:
- Modbus (NCE HQ on request)
- Eternet (NCE HQ on request)
- analog input 0-10V
- remote on/off input
- output relay

Applications

Heating and conditioning systems.

Operating conditions

- Liquid temperature from +2 °C to +110 °C
- Ambient temperature from 0 °C to +40 °C
- Maximum permissible working pressure: 10 bar
- Storage: -20°C/+70°C max. relative humidity 95% at 40 °C
- Certifications: in conformity with CE requirements
- Sound pressure ≤ 40 dB (A).
- Minimum suction pressure: - 0,05 bar at 75 °C
  - 0,28 bar a 90 °C.
- Maximum glycol quantity: 20%.
- EMC according to: EN 55014-1, EN 55014-2
  EN 61000-3-2, EN 61000-3-2.
- Connections: Flanges according to PN 6/10, EN 1092-2, DN 32,40,50,65,80,100.
- The benchmark for most efficient circulators is EEI ≤ 0,20.

Designation

NCE (D) HQ 40 F - 120 / 220

- Series
- Twin pumps version
- Version
- DN ports in mm
- With flanges
- Max. head in dm
- connection size mm

Motor

Synchronous motor with permanent magnet.
- Motor: variable speed
- Standard voltage: single-phase 230 V (-10%;+6%)
- Frequency: 50/60 Hz
- Protection: IP 44
- Insulation class: F
- Overload protection (integrated).
- Cable: phases and neutral.
- Constructed in accordance with: EN 60335-1, EN 60335-2-51.

Features

Smart pump

NCE(D) HQ.F adapt its functions to the system: the circulator measures the pressure and the flow and adjusts the speed to the selected pressure.

Easy use

There are different operating modes selectable from the control panel.

NCE(D) HQ.F

Energy saving twin circulating pumps with flanges

Operating modes

Automatic mode
(factory setting):
In this mode the pump automatically sets the operating pressure, depending on the hydraulic system. This mode is recommended in most systems.

Proportional pressure mode:
The circulator changes the pressure propotionally to the current flow.
The pressure value can be adjusted with the + and – buttons.

Constant pressure mode:
The circulator mantains the pressure constant when the reference flow changes.
The pressure value can be adjusted with the + and – buttons.

Fixed speed mode:
The circulator works with constant curve and the curve could be changed using + e – buttons.

Night mode:.
When the liquid temperature fall by 15-20°C the pump automatically swiches to night mode, in practice the circulator works at minimum curve.
When the temperature rises again the pump comes back to the selected mode
The night mode could be selected with any operating mode.

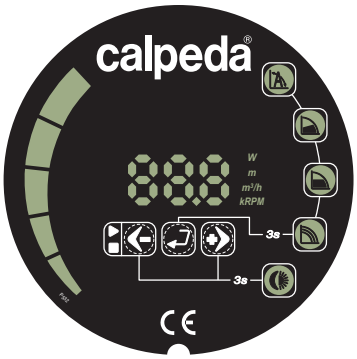

Operating mode-control panel

NCE HQ.F could works in:
- automatic mode
- proportional pressure mode
- constant pressure mode
- fixed speed mode
- night mode

The night mode could be selected with any operating mode.

Coverage chart

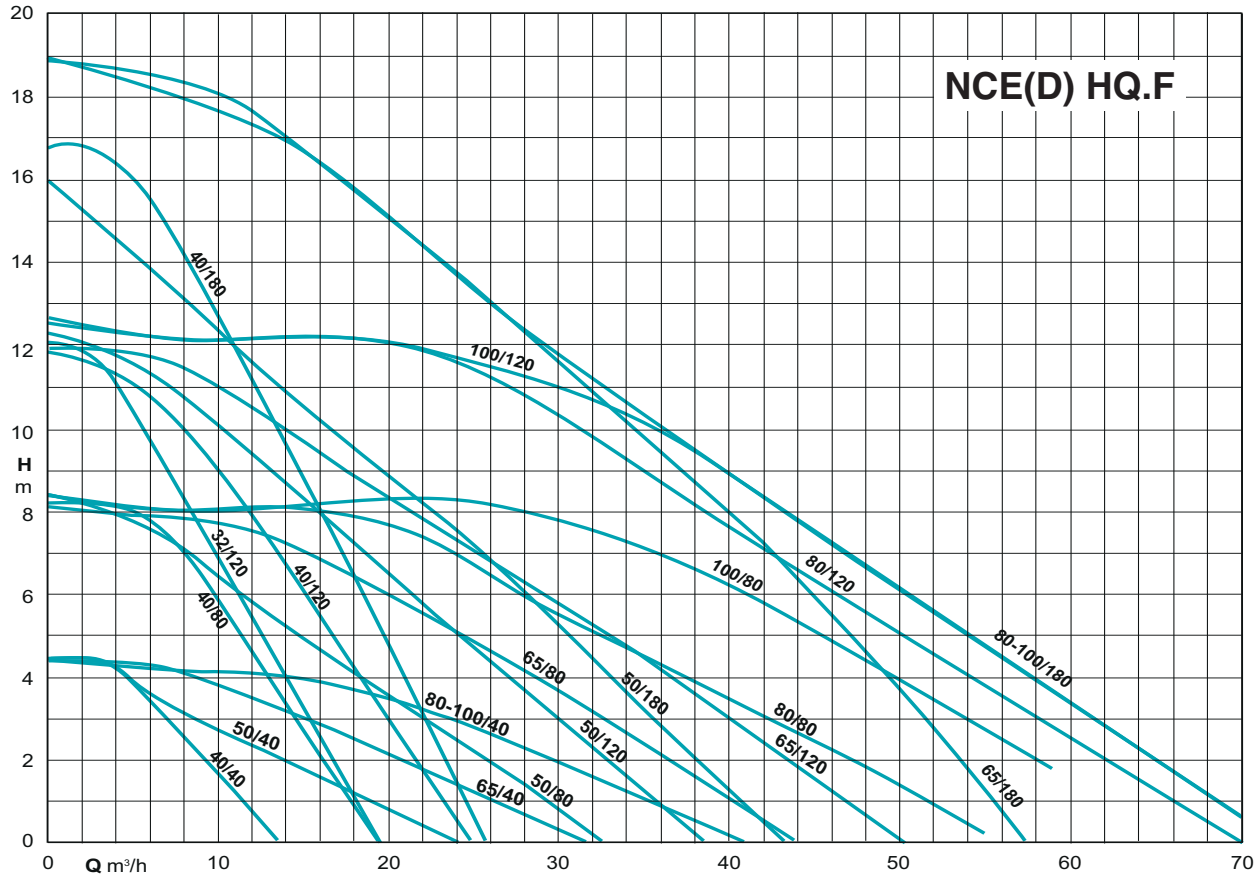

Characteristic curves

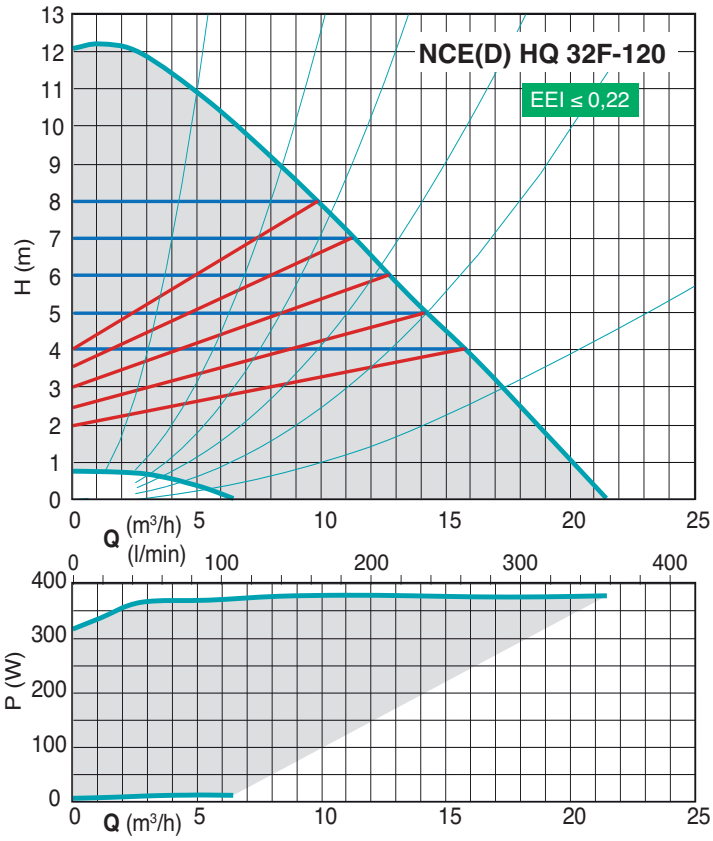

NCE(D) HQ.F

Energy saving twin circulating pumps with flanges

calpeda

Characteristic curves

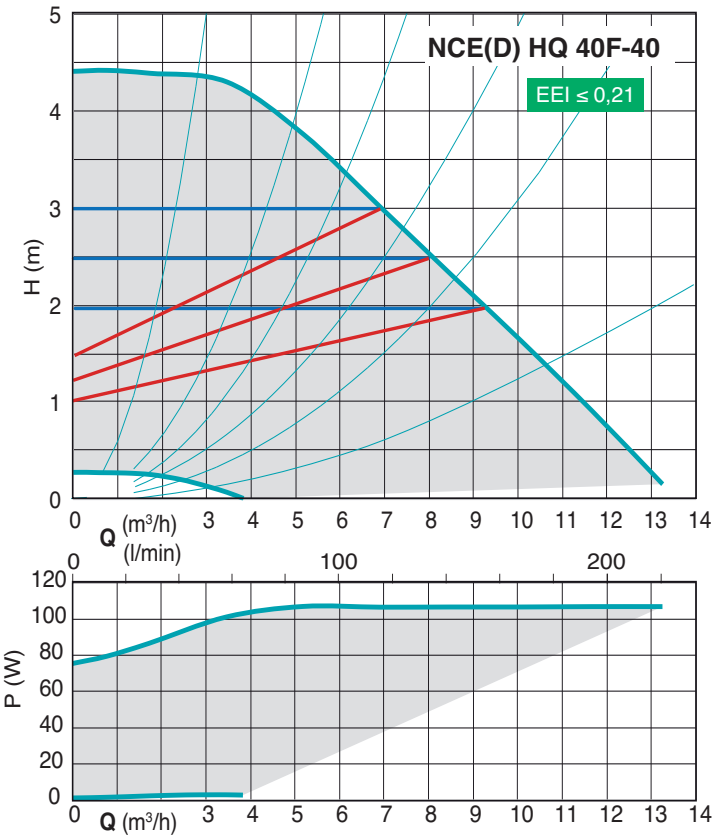

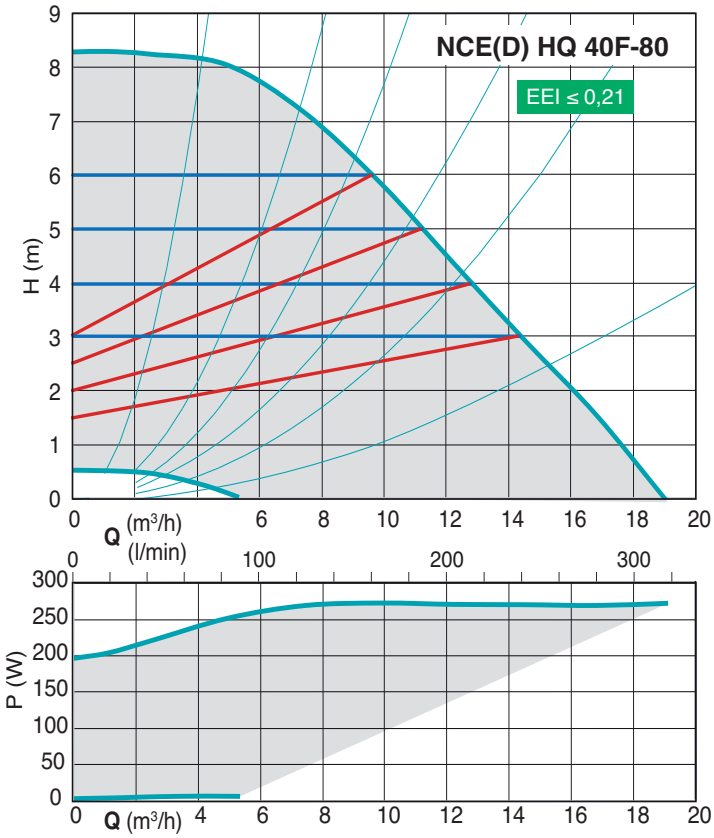

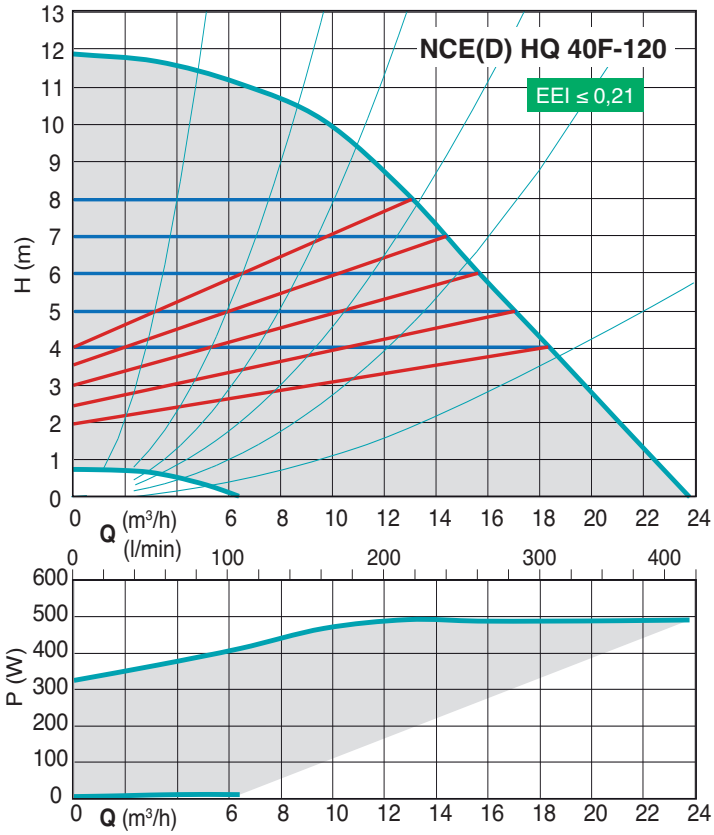

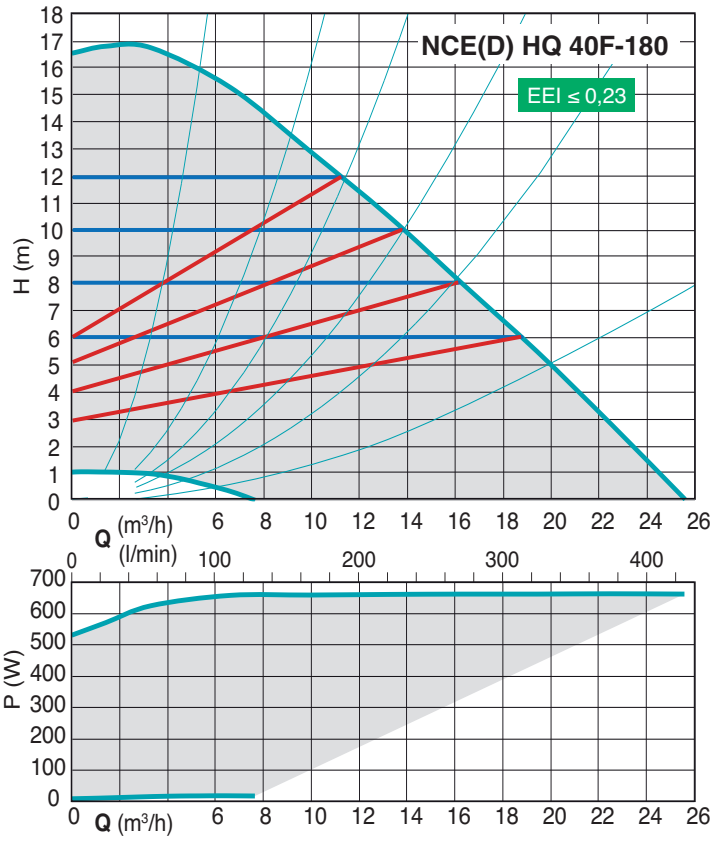

NCE(D) HQ.F

Energy saving twin circulating pumps with flanges

calpeda

Characteristic curves

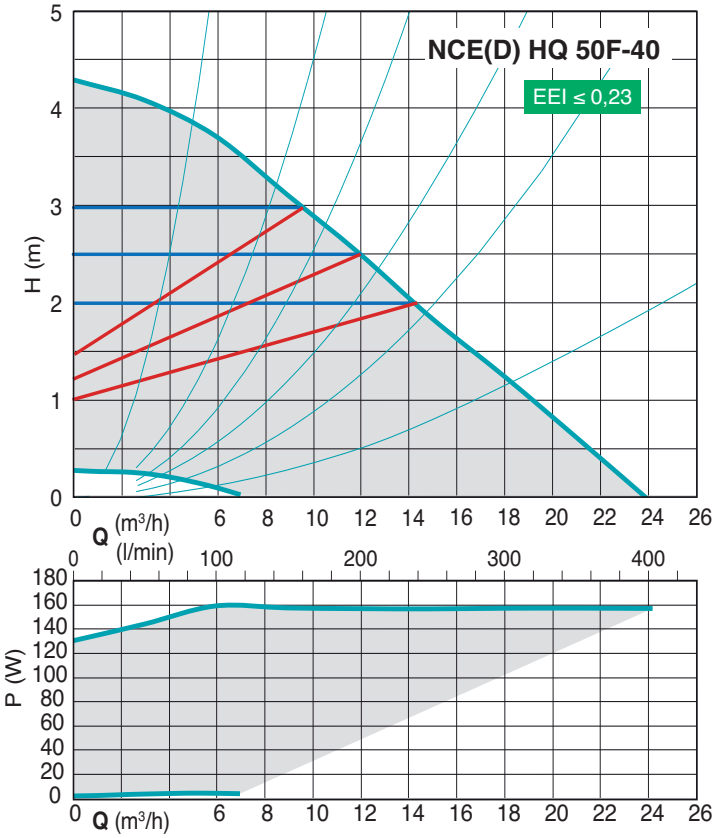

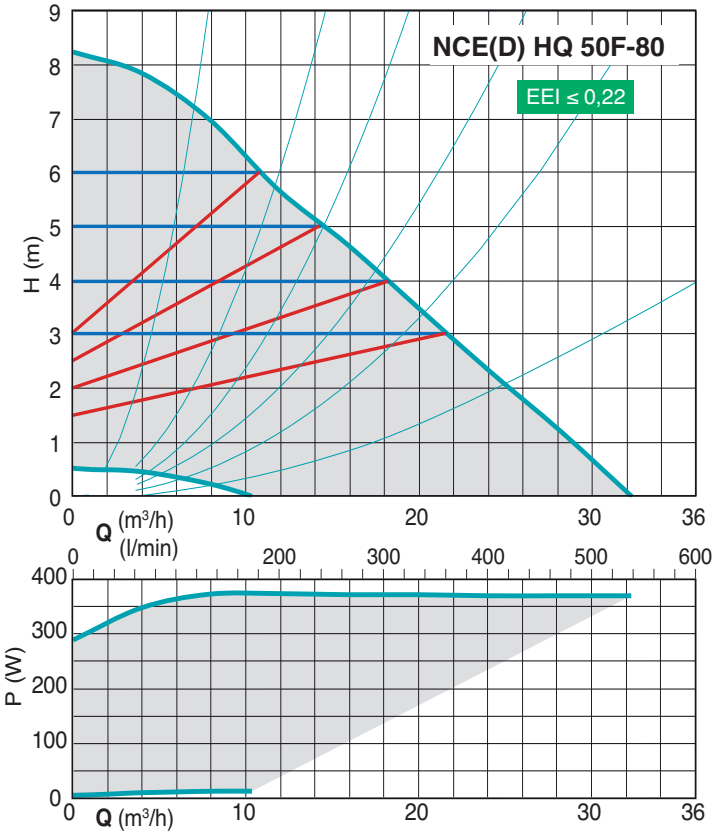

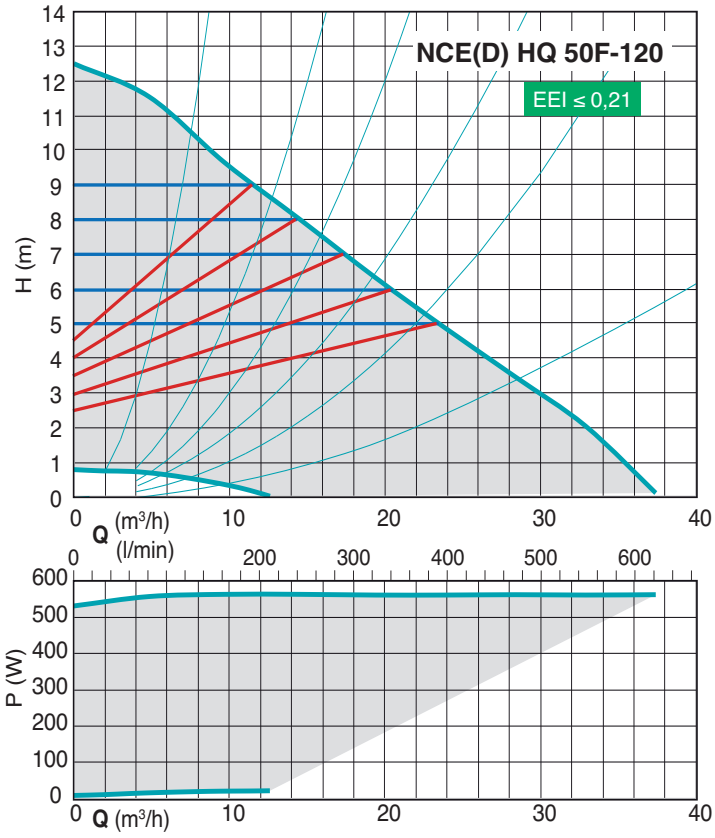

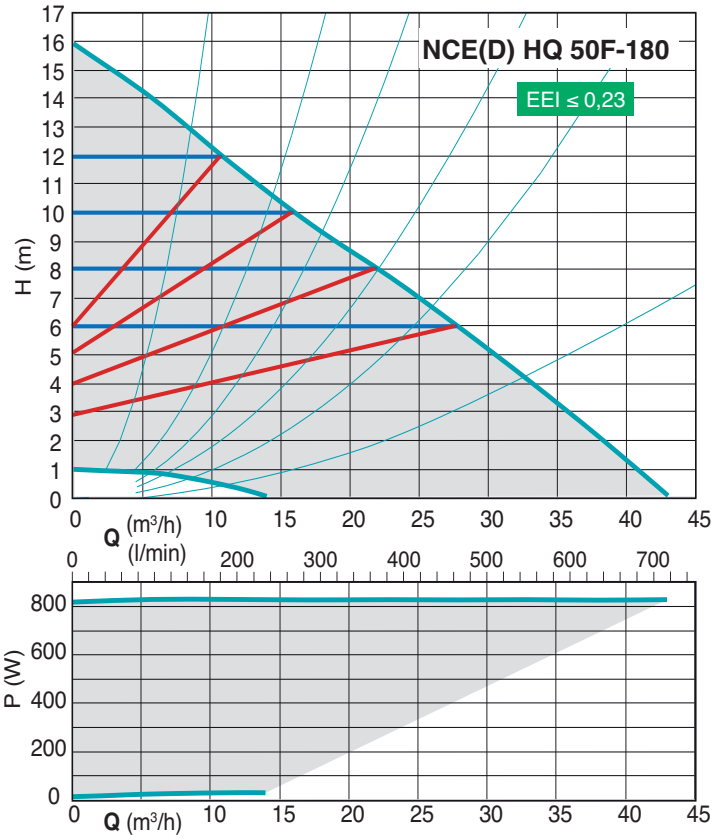

NCE(D) HQ.F

Energy saving twin circulating pumps with flanges

calpeda

Characteristic curves

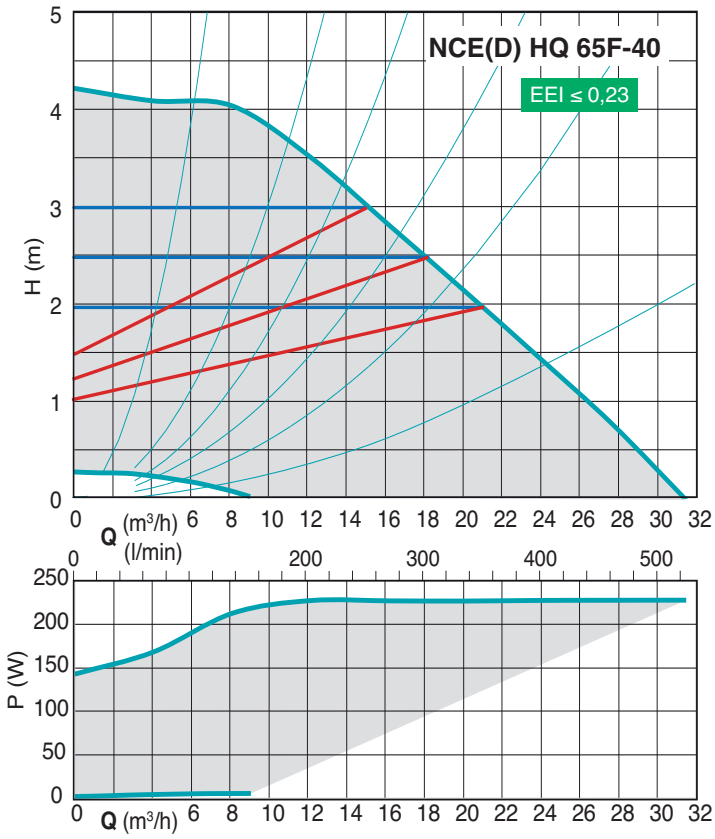

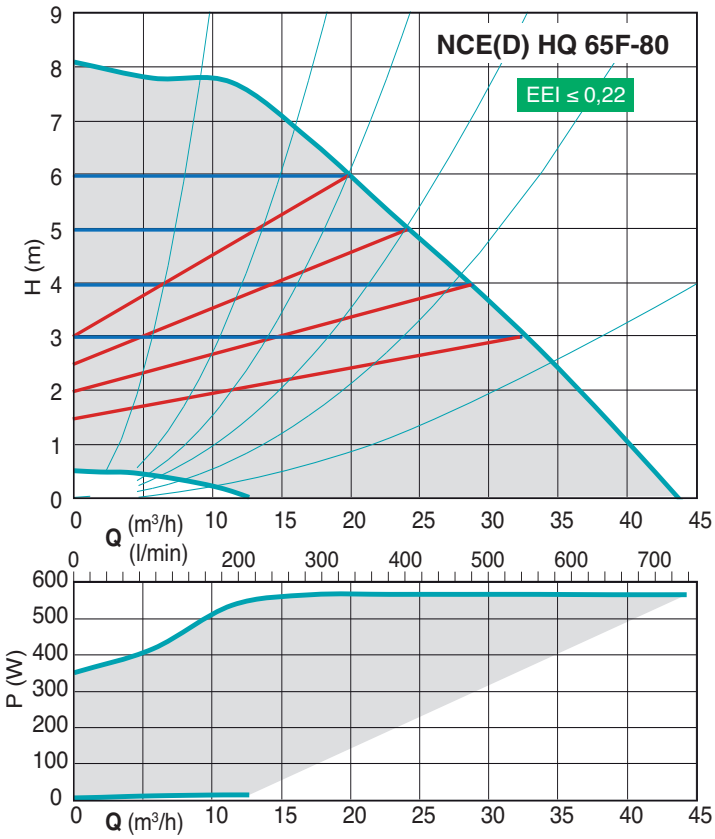

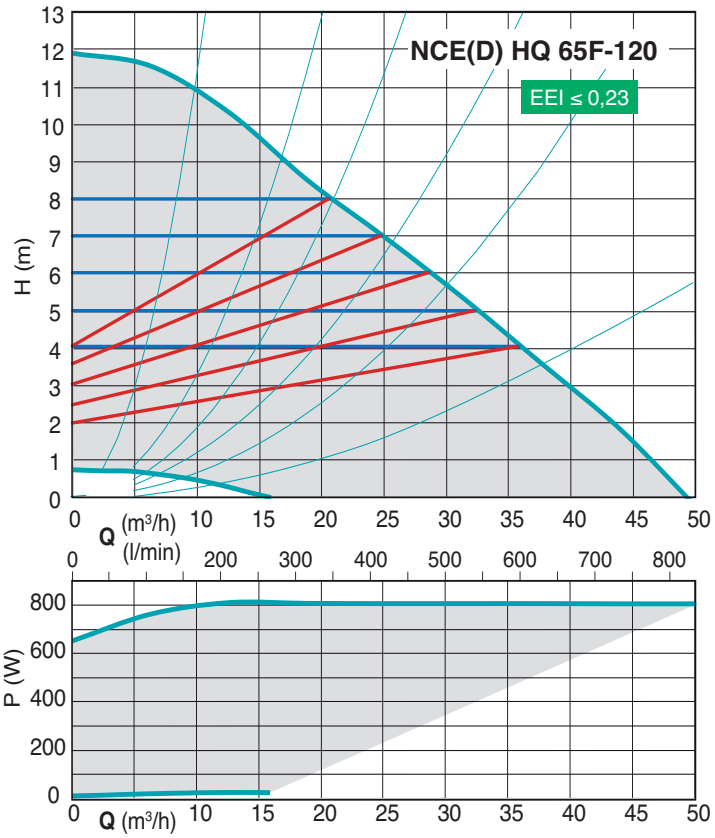

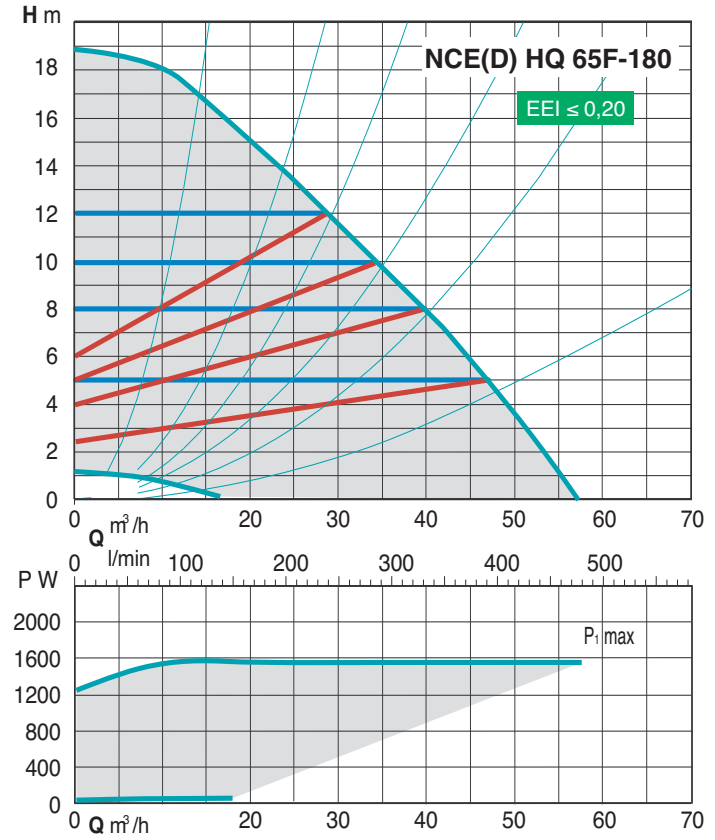

NCE(D) HQ.F

Energy saving twin circulating pumps with flanges

calpeda

Characteristic curves

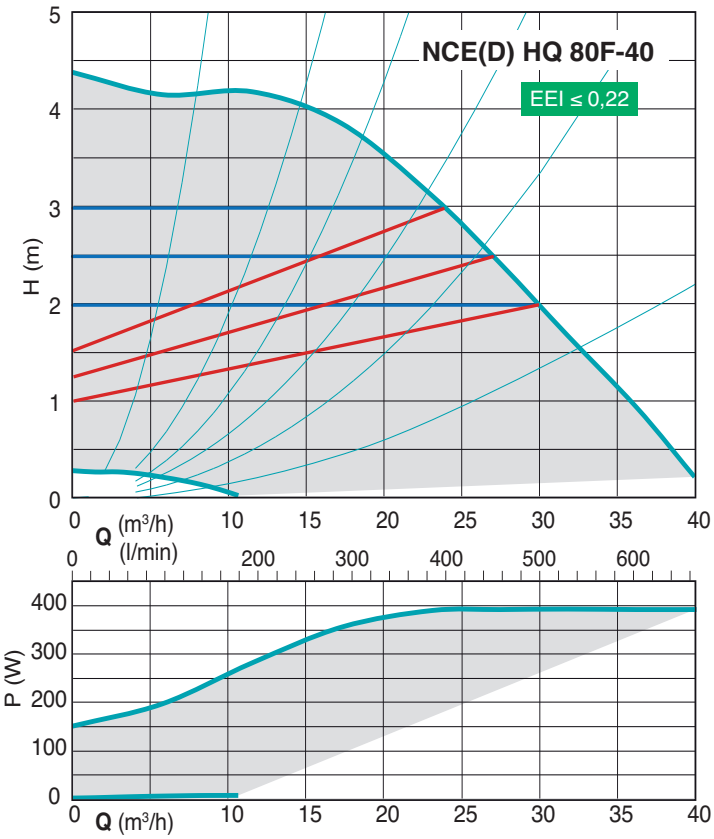

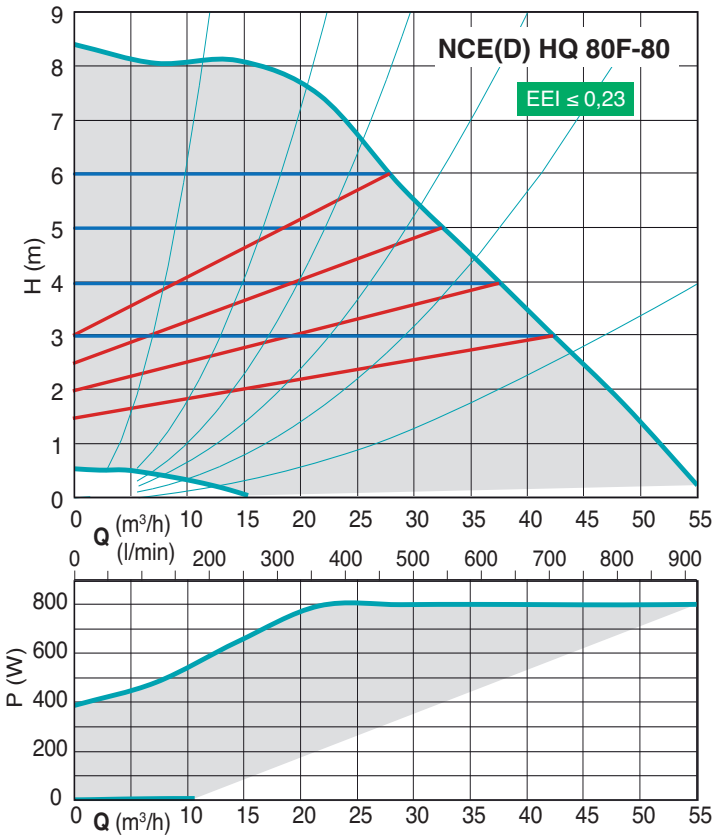

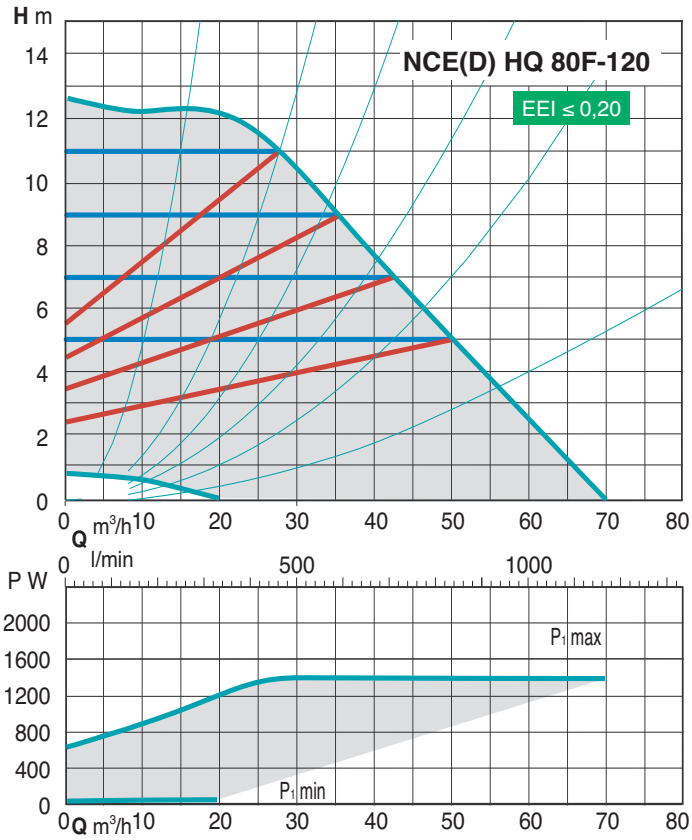

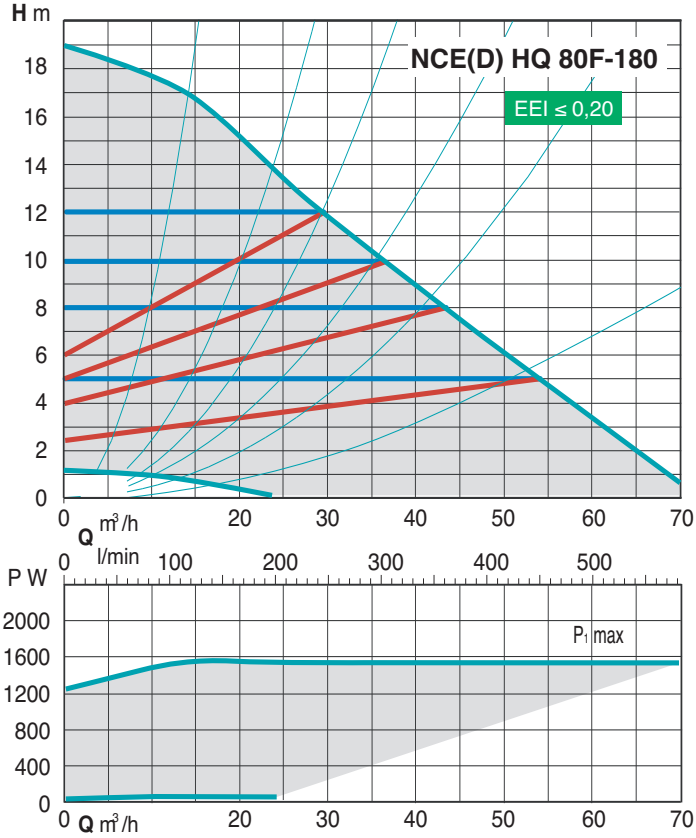

NCE(D) HQ.F

Energy saving twin circulating pumps with flanges

calpeda

Characteristic curves

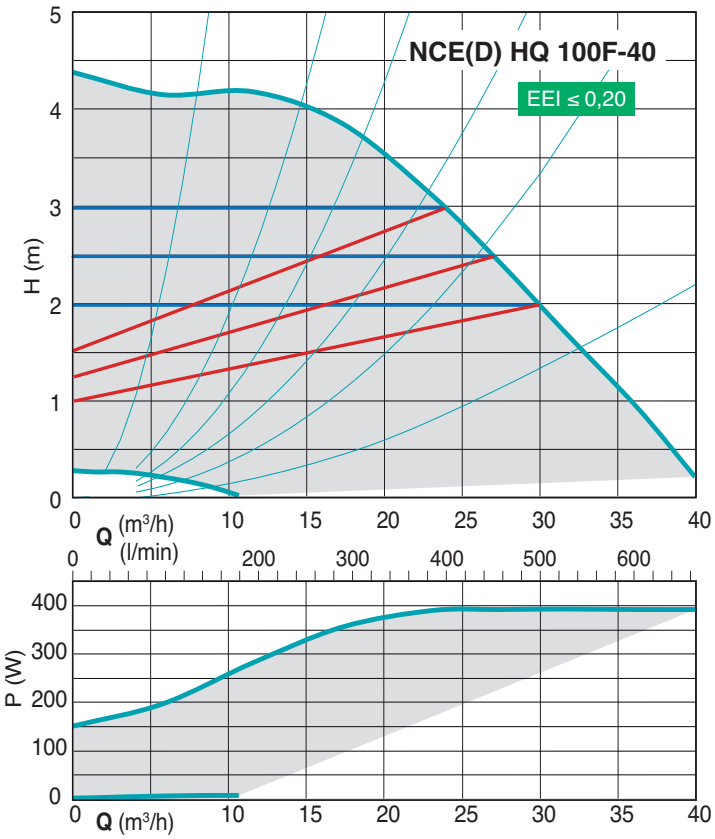

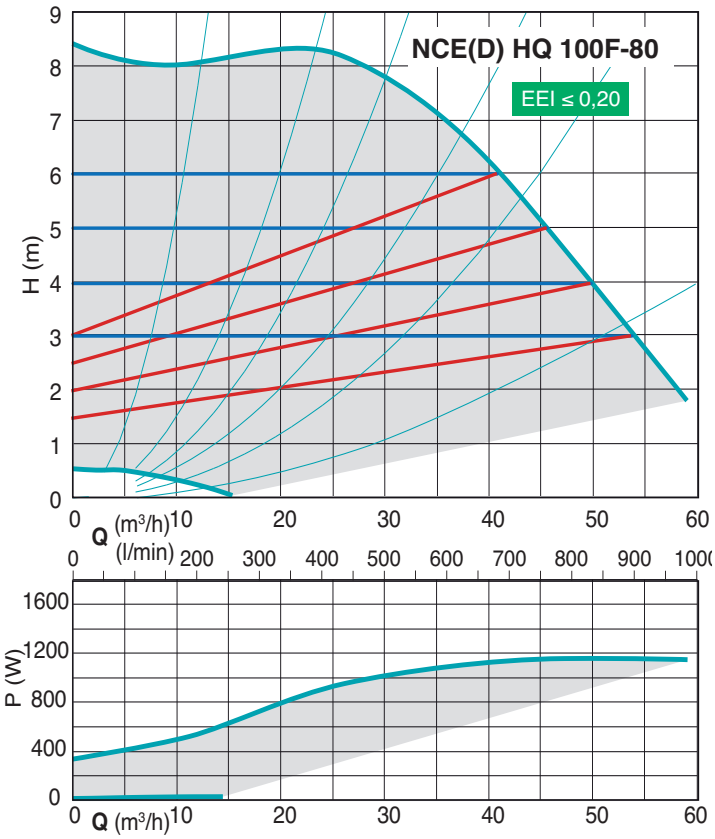

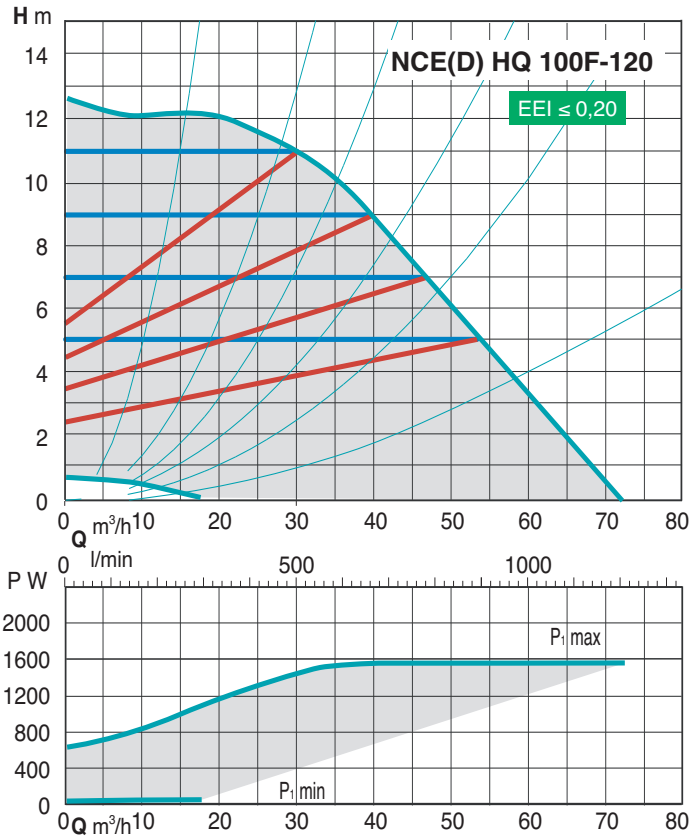

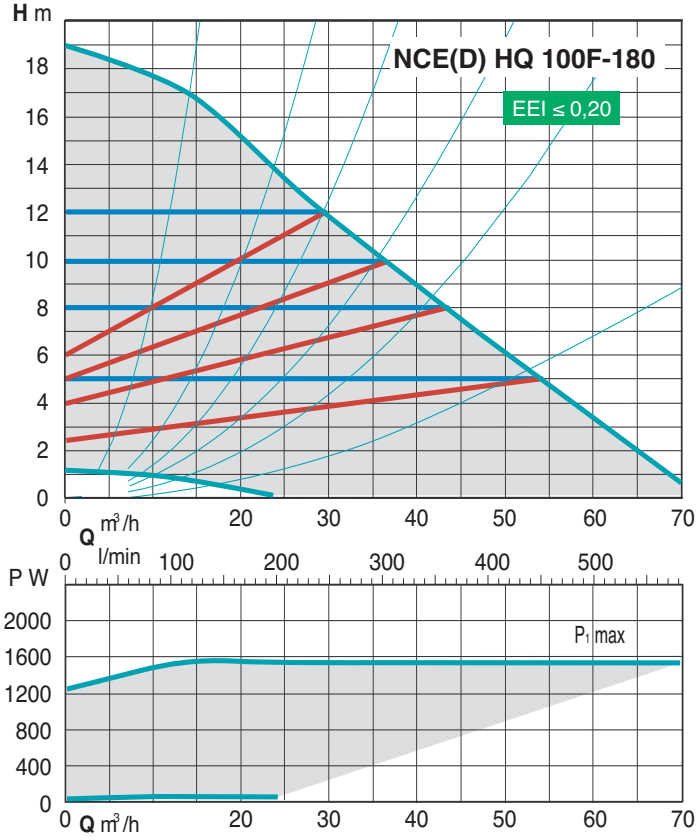

Materials

Component	Pos.	Material
Pump casing	1	Cast iron GJL 200 EN 1561
Impeller	2	Composite
Shaft	3	Stainless steel
Bearings	4	Carbon
Thrust bearing	5	Ceramic
Rotor	6	Stainless steel jacket
Winding	7	Copper wire
Electronic card	8	-
Gasket	9	EPDM

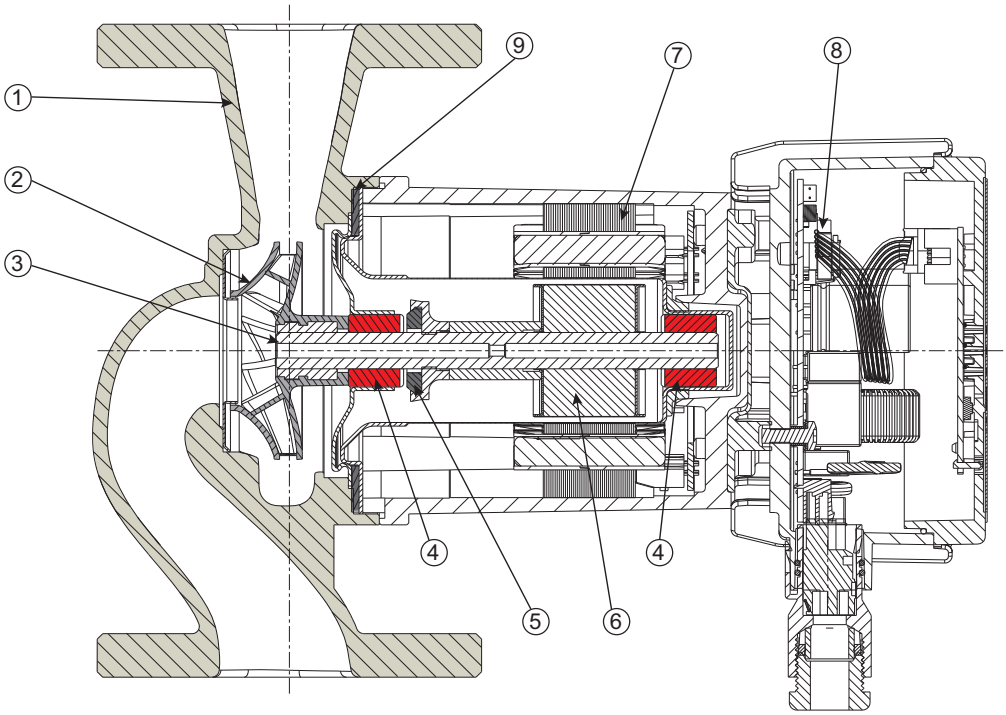

NCE HQ.F

Energy saving circulating pumps with flanges

calpeda

Dimensions and weights

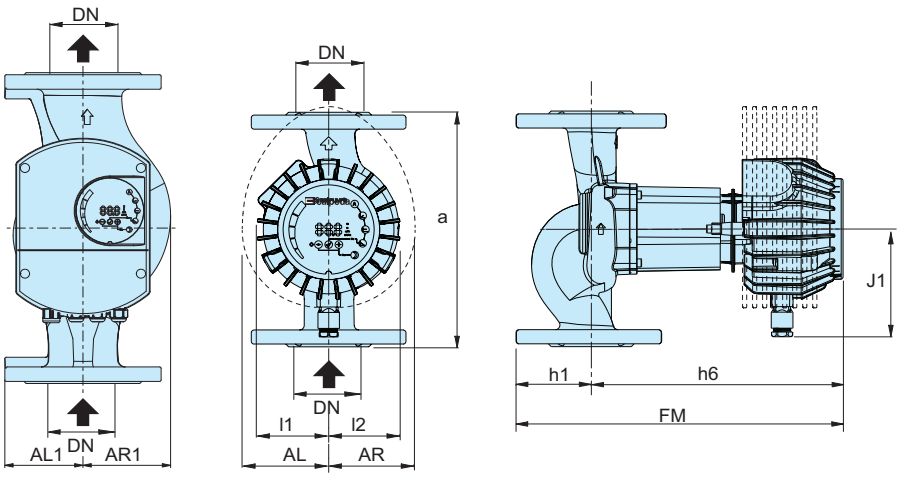

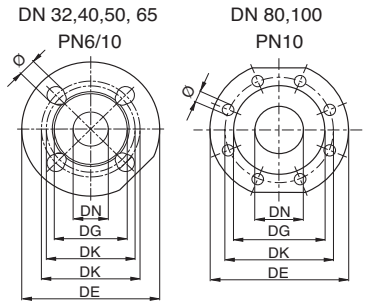

DN	DE	DK	DG	holes N.	holes Ø
32	140	90/100	74	4	14/19
40	150	100/110	80	4	14/19
50	165	110/125	90	4	14/19
65	185	130/145	110	4	14/19
80	200	160	148	8	19
100	220	180	166	8	19

TYPE	DN	H m	Q m³/h	1~ 230 V A max	P1 W max	mm a	J1	FM	h1	h6	l1	l2	AL	AR	AL1	AR1	kg
NCE HQ 32F-120/220	32	12	19	1.8	370	220	115	330	65	265	75	75	-	-	-	-	9,1
NCE HQ 40F-40/250	40	4	13	1	110	250	99	270	65	205	59	74	-	-	-	-	8,2
NCE HQ 40F-80/250	40	8	19	1.3	270	250	115	330	65	265	75	75	-	-	-	-	9,6
NCE HQ 40F-120/250	40	12	24	2.3	480	250	115	330	65	265	75	75	-	-	-	-	9,95
NCE HQ 40F-180/250	40	18	25	3.4	680	250	115	330	65	265	-	-	90	90	-	-	14,2
NCE HQ 50F-40/280	50	4	23	1.3	160	280	99	313	65	241	74	92	-	-	-	-	10,8
NCE HQ 50F-80/280	50	8	32	1.7	370	280	115	373	72	301	75	92	-	-	-	-	12,35
NCE HQ 50F-120/280	50	12	36	2.5	560	280	115	373	72	301	75	92	-	-	-	-	13
NCE HQ 50F-180/280	50	18	42	3.6	830	280	115	383	72	311	-	-	92	90	-	-	15,9
NCE HQ 65F-40/340	65	4	31	1.1	230	340	115	386	75	311	83	100	-	-	-	-	15,95
NCE HQ 65F-80/340	65	8	43	2.6	560	340	115	386	75	311	83	103	-	-	-	-	16,65
NCE HQ 65F-120/340	65	12	50	3.5	810	340	115	397	75	322	-	103	90	-	-	-	19,3
NCE HQ 65F-180/340	65	18	57	6,6	1550	340	137	434	75	359	-	-	-	-	94,5	104	-
NCE HQ 80F-40/360	80	4	40	1.8	390	360	115	414	93	321	98	123	-	-	-	-	23,4
NCE HQ 80F-80/360	80	8	53	3.5	800	360	115	425	93	332	98	123	-	-	-	-	25,8
NCE HQ 80F-120/360	80	12	69	6,0	1400	360	137	462	93	369	-	-	-	-	98,5	124	-
NCE HQ 80F-180/360	80	18	72	6,6	1550	360	137	462	93	369	-	-	-	-	98,5	124	-
NCE HQ 100F-40/450	100	4	40	2.4	550	450	115	424	103	321	98	123	-	-	-	-	-
NCE HQ 100F-80/450	100	8	59	4,7	1150	450	137	472	103	369	-	-	-	-	110	124	-
NCE HQ 100F-120/450	100	12	72	6,6	1550	450	137	472	103	369	-	-	-	-	110	124	-
NCE HQ 100F-180/450	100	18	72	6,6	1550	450	137	472	103	369	-		-	-	110	124	-

Examples of installations

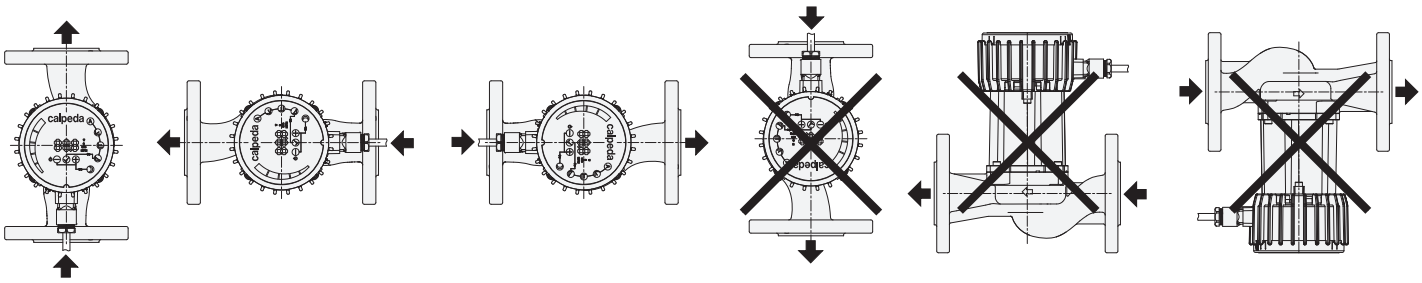

NCE(D) HQ.F

Energy saving twin circulating pumps with flanges

calpeda

Dimensions and weights

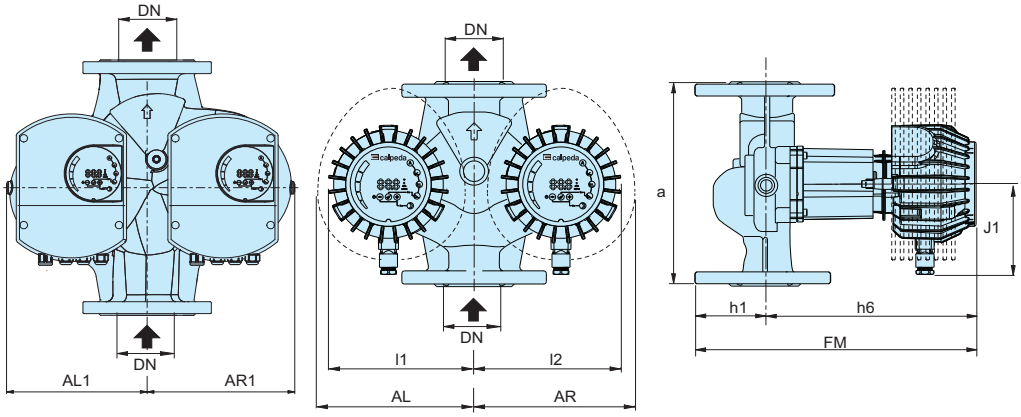

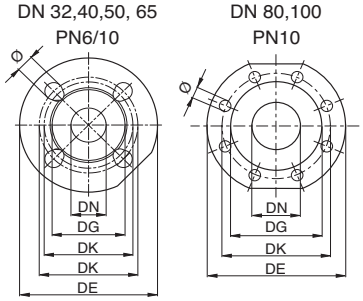

DN	DE	DK	DG	holes N.	holes Ø
32	140	90/100	74	4	14/19
40	150	100/110	80	4	14/19
50	165	110/125	90	4	14/19
65	185	130/145	110	4	14/19
80	200	160	148	8	19
100	220	180	166	8	19

TYPE	DN	H m	Q m^3/h	1~ 230 V A max	P_1 W max	a	J1	FM	h1	h6	l1	l2	AL	AR	AL1	AR1	kg
						mm											
NCED HQ 32F-120/220	32	12	19	1.8	370	220	115	330	65	265	-	-	185	186	-	-	-
NCED HQ 40F-40/250	40	4	13	1	110	250	99	270	65	205	181	186	-	-	-	-	14,3
NCED HQ 40F-80/250	40	8	19	1.3	270	250	115	330	65	265	-	-	185	186	-	-	16,7
NCED HQ 40F-120/250	40	12	24	2.3	480	250	115	330	65	265	-	-	185	186	-	-	16,9
NCED HQ 40F-180/250	40	18	25	3.4	680	250	115	390	65	325	-	-	200	200	-	-	25
NCED HQ 50F-40/280	50	4	23	1.3	160	280	99	313	72	241	199	200	-	-	-	-	19,6
NCED HQ 50F-80/280	50	8	32	1.7	370	280	115	373	72	301	199	200	-	-	-	-	22,4
NCED HQ 50F-120/280	50	12	36	2.5	560	280	115	373	72	301	199	200	-	-	-	-	23,6
NCED HQ 50F-180/280	50	18	42	3.6	830	280	115	373	72	311	-	203	200	-	-	-	28,8
NCED HQ 65F-40/340	65	4	31	1.1	230	340	115	384	75	309	216	226	-	-	-	-	32,2
NCED HQ 65F-80/340	65	8	43	2.6	560	340	115	384	75	309	216	226	-	-	-	-	32,7
NCED HQ 65F-120/340	65	12	50	3.5	810	340	115	395	75	320	216	226	-	-	-	-	38,4
NCED HQ 65F-180/340	65	18	57	6,6	1550	340	137	432	75	357	-	-	-	-	216	226	-
NCED HQ 80F-40/360	80	4	40	1.8	390	360	115	414	93	321	241	253	-	-	-	-	-
NCED HQ 80F-80/360	80	8	53	3.5	800	360	115	425	93	332	241	253	-	-	-	-	-
NCED HQ 80F-120/360	80	12	69	6,0	1400	360	137	462	93	369	-	-	-	-	241	253	-
NCED HQ 80F-180/360	80	18	72	6,6	1550	360	137	462	93	369	-	-	-	-	241	253	-
NCED HQ 100F-40/450	100	4	40	2.4	550	450	115	424	103	321	241	253	-	-	-	-	-
NCED HQ 100F-80/450	100	8	59	4,7	1150	450	137	472	103	369	-	-	-	-	241	253	-
NCED HQ 100F-120/450	100	12	72	6,6	1550	450	137	472	103	369	-	-	-	-	241	253	-
NCED HQ 100F-180/450	100	18	72	6,6	1550	450	137	472	103	369	-	-	-	-	241	253	-

Examples of installations

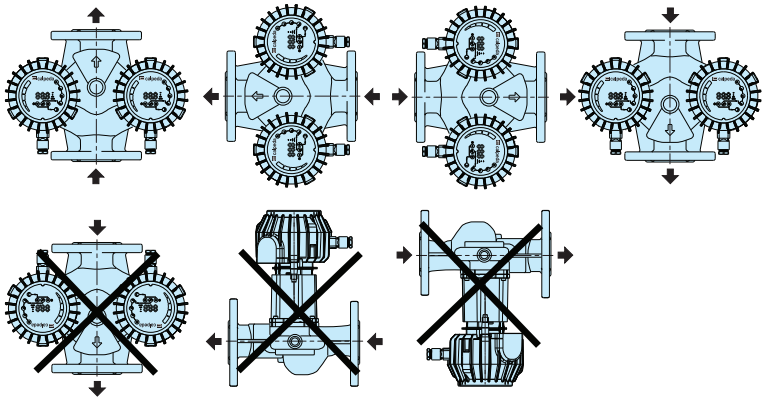

NCE EI

Energy saving circulating pumps

ErP READY 2015 — APPLIES TO EUROPEAN DIRECTIVE FOR ENERGY RELATED PRODUCTS

Designation

NCE EI 32 - 60 / 180

- Series
- Version
- DN ports in mm
- Max. head in dm
- connection size mm

Construction

Energy saving variable speed circulating pump driven by a permanent magnet synchronous motor (pm) controlled by on board inverter.

Applications

Small domestic heating systems.
Floor heating systems.

Operating conditions

- Liquid temperature from +2 °C to +95 °C
- Ambient temperature from 0 °C to +40 °C
- Maximum permissible working pressure: 6 bar
- Storage: -20°C/+70°C max. relative humidity 95% at 40 °C
- Certifications: in conformity with CE requirements
- Sound pressure ≤ 43 dB (A).
- Minimum suction pressure: 0,3 bar at 50 °C
  1,0 bar at 95 °C
- Maximum glycol quantity: 40%
- EMC according to: EN 55014-1, EN 61000-3-2, EN 55014-2
- Connections: threaded ports ISO 228: G 1, G 1 1/2, G 2
- The benchmark for most efficient circulators is EEI ≤ 0,20.
- Minimun power: 3 W.

Motor

Synchronous motor with permanent magnet.
- Motor: variable speed
- Standard voltage: single-phase 230 V (-10%;+6%)
- Frequency: 50-60 Hz
- Protection: IP 44
- Insulation class: H
- Class II appliance
- Overload protection (jammed rotor):
  1) automatic protection with electronic rotor release
  2) Overload thermal protector
- Cable: phases and neutral
- Constructed in accordance with: EN 60335-1, EN 60335-2-51.

Special features on request

Brass or cast iron unions.
EPP thermal insulation shell.

Features

Compact design

The space saving **NCE EI** is a very compact circulating pump, allows inr easy installation in small domestic heating systems.

Easy to install and to adjust

Installing the **NCE EI** is considerably simplified by the quick setting and power installation plug.

Reliable

Like all our electronic circulating pumps, the **NCE EI** features the patented self-cleaning square chamber design, which eliminates any possibility of rotor blockage.
Ceramic shaft
Hydraulics components are completely painted with cataphoresis.

Easy use

Operating range with fixed curves from 0,5 m to 7 m; possibility to choose 2 (1-2) proportional pressure curves and 2 (I-II) constant pressure curves.

NCE EI

Energy saving circulating pumps

Operating modes

PROPORTIONAL CURVE PROGRAMMING Δp-v
(GREEN LED)
Moving the switch to 1 or 2 setting, the pump operates with the proportional curve.
This mode ensures maximum energy efficiency.

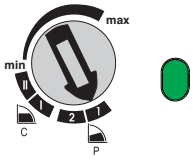

CONSTANT CURVE PROGRAMMING Δp-c
(ORANGE LED)
Moving the switch to I or II setting, the pump operates with a constant curve according to the selected flow rates.

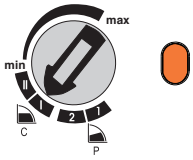

MANUAL PROGRAMMING
(BLUE LED)
Setting the switch in any position between the MIN and MAX points, the most suitable operating curve for the installation is manually selected.

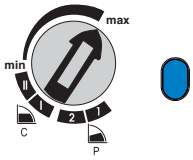

WARNING!
- The red LED indicates that the pump is not rotating but is still under tension.
- White flashing LED : plant degassing requirement, air in the system.

Characteristic curves

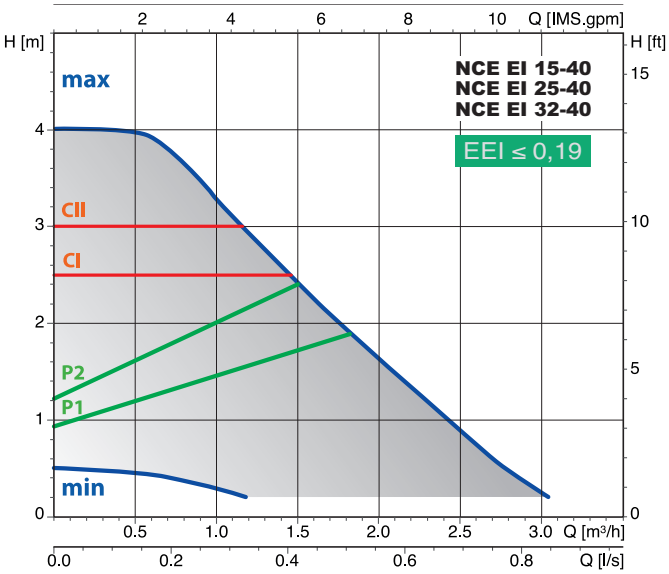

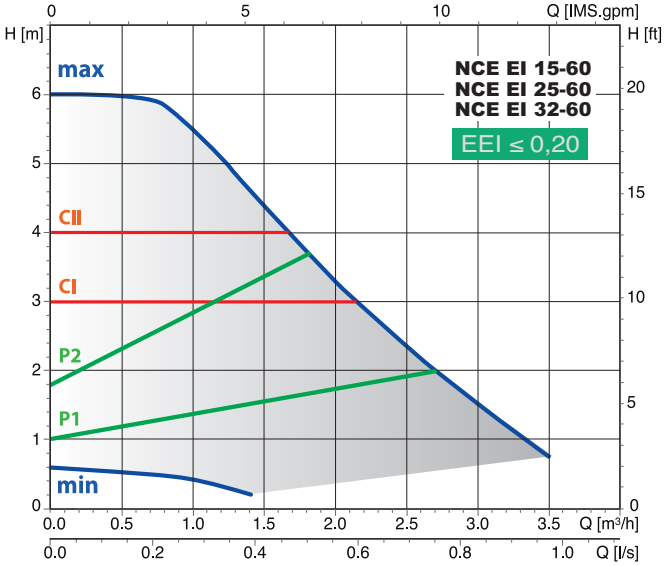

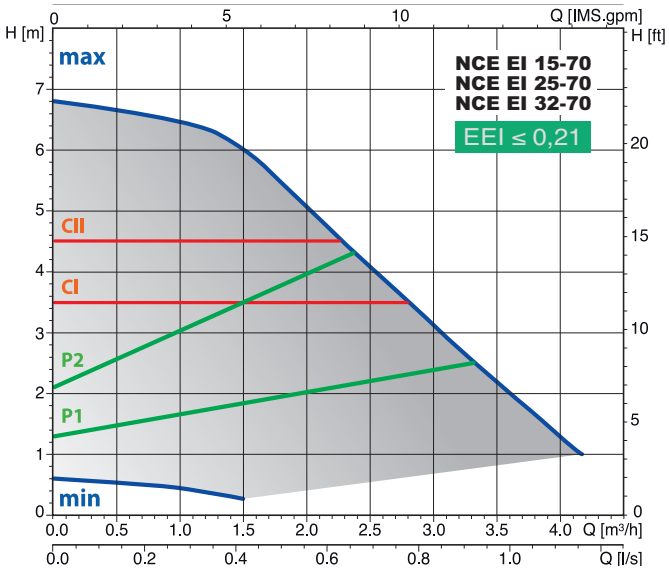

CI-CII constant curve
P1-P2 proportional curve
min-max n fixed curves

Materials

Component	Pos.	Material
Pump casing	1	Cast iron GJL 200 EN 1561
Impeller	2	Composite
Shaft	3	Ceramic
Bearings	4	Carbon
Thrust bearing	5	Ceramic
Rotor	6	Composite / Ferrite
Winding	7	Copper wire
Electronic card	8	-
Gasket	9	EPDM

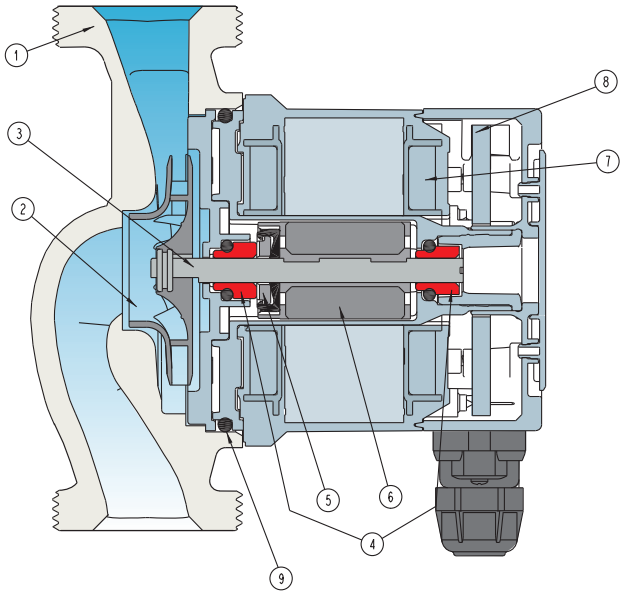

Dimensions and weights

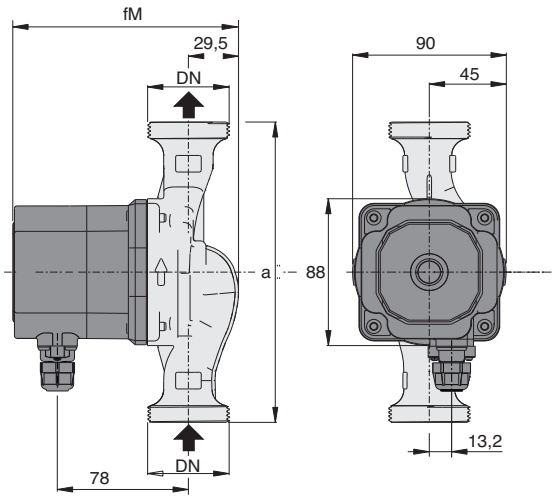

TYPE	DN	230V A max	230V A min	P1 W max	P1 W min	mm fm	mm a	kg
NCE EI 15-40/130	G 1	0,17	0,03	22	3	134	130	1,67
NCE EI 25-40/130	G 1 1/2							1,81
NCE EI 25-40/180	G 1 1/2	0,17	0,03	22	3	134	180	1,96
NCE EI 32-40/180	G 2							2,10
NCE EI 15-60/130/A	G 1	0,33	0,03	42	3	134	130	1,67
NCE EI 25-60/130/A	G 1 1/2							1,81
NCE EI 25-60/180/A	G 1 1/2	0,33	0,03	42	3	134	180	1,96
NCE EI 32-60/180/A	G 2							2,10
NCE EI 15-70/130	G 1	0,44	0,03	56	3	144	130	1,91
NCE EI 25-70/130	G 1 1/2							2,05
NCE EI 25-70/180	G 1 1/2	0,44	0,03	56	3	144	180	2,20
NCE EI 32-70/180	G 2							2,34

Unions (on request)

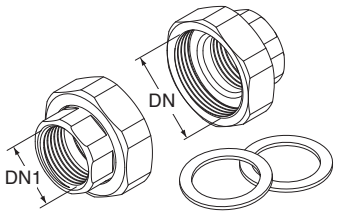

		DN	DN1
KIT G 1 - G 1/2	(NCE . 15..)	G 1	G 1/2
KIT G 1 1/2 - G 1	(NCE . 25..)	G 1 1/2	G 1
KIT G 2 - G 1 1/4	(NCE . 32..)	G 2	G 1 1/4

Examples of installations

Installation

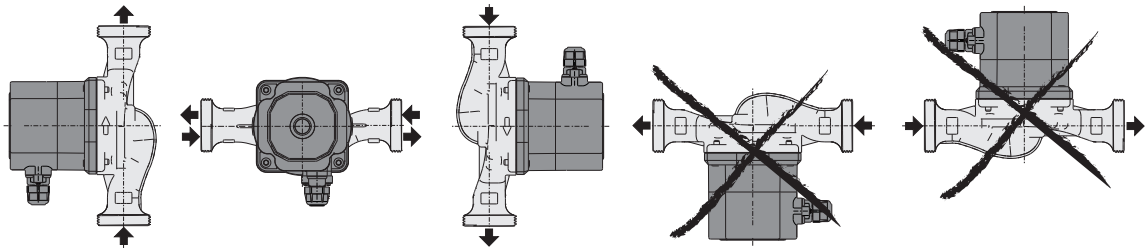

Terminal box arrangement (on request)

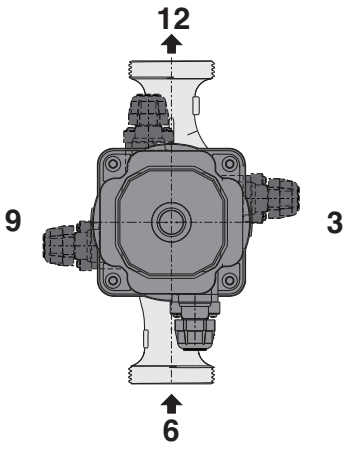

NCE(D) H

Energy saving circulating pumps

Designation

NCE(D) H 25 - 100 / 180

- Series
- Twin pumps version
- Version
- DN ports in mm
- Max. head in dm
- connection size mm

Construction

Energy saving variable speed circulating pump driven by a permanent magnet synchronous motor (pm) controlled by on board inverter.

Applications

Heating and conditioning systems.

Operating conditions

- Liquid temperature from +2 °C to +110 °C
- Ambient temperature from 0 °C to +40 °C
- Maximum permissible working pressure: 10 bar
- Storage: -20°C/+70°C max. relative humidity 95% at 40 °C
- Certifications: in conformity with CE requirements
- Sound pressure ≤ 40 dB (A).
- Minimum suction pressure: - 0,05 bar at 75 °C
  - 0,28 bar a 90 °C.
- Maximum glycol quantity: 20%.
- EMC according to: EN 55014-1, EN 55014-2
  EN 61000-3-2, EN 61000-3-2.
- Connections: threaded ports ISO 228: G 1 1/2, G 2.
- The benchmark for most efficient circulators is EEI ≤ 0,20.

Motor

Synchronous motor with permanent magnet.
- Motor: variable speed
- Standard voltage: single-phase 230 V (-10%;+6%)
- Frequency: 50/60 Hz
- Protection: IP 44
- Insulation class: F
- Overload protection (integrated).
- Cable: phases and neutral.
- Constructed in accordance with: EN 60335-1, EN 60335-2-51.

Special features on request

Additional module (included with NCEDH):
- Modbus
- Eternet
- analog input 0-10V
- remote on/off input
- output relay

Features

Smart pump

NCE H adapt its functions to the system: the circulator measures the pressure and the flow and adjusts the speed to the selected pressure.

Easy use

There are different operating modes selectable from the control panel.

NCE(D) H

Energy saving circulating pumps

Operating modes

Automatic mode
(factory setting):
In this mode the pump automatically sets the operating pressure, depending on the hydraulic system. This mode is recommended in most systems.

Proportional pressure mode:
The circulator changes the pressure propotionally to the current flow.
The pressure value can be adjusted with the + and – buttons.

Constant pressure mode:
The circulator mantains the pressure constant when the reference flow changes.
The pressure value can be adjusted with the + and – buttons.

Fixed speed mode:
The circulator works with constant curve and the curve could be changed using + e – buttons.

Night mode:.
When the liquid temperature fall by 15-20°C the pump automatically swiches to night mode, in practice the circulator works at minimum curve.
When the temperature rises again the pump comes back to the selected mode
The night mode could be selected with any operating mode.

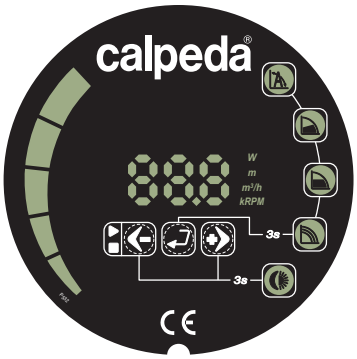

Operating mode-control panel

NCE(D) H could works in:
- automatic mode
- proportional pressure mode
- constant pressure mode
- fixed speed mode
- night mode

The night mode could be selected with any operating mode.

Coverage chart

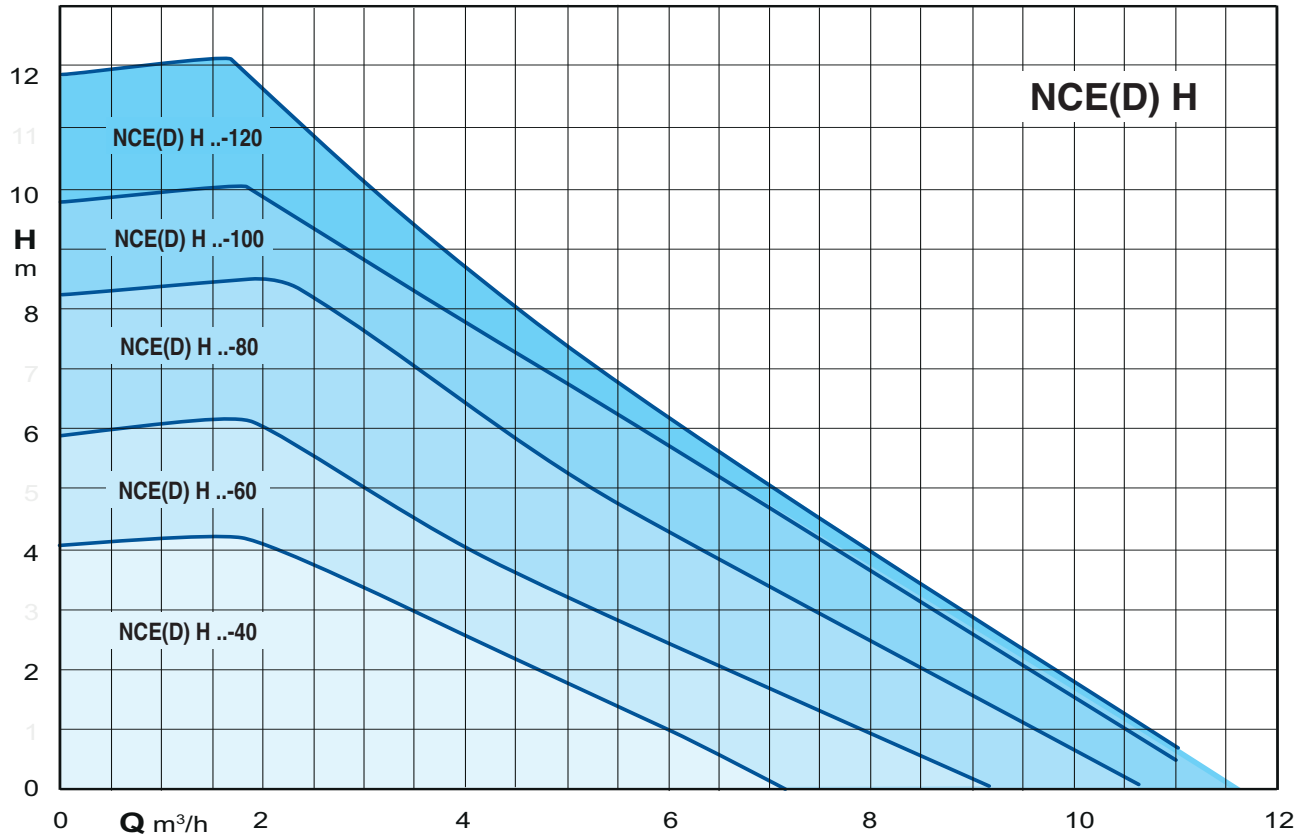

Characteristic curves

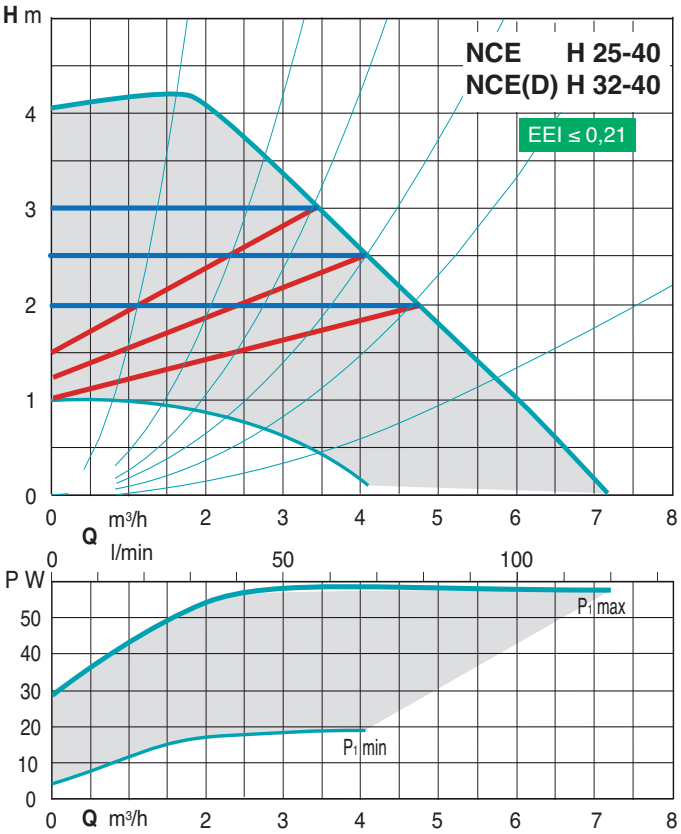

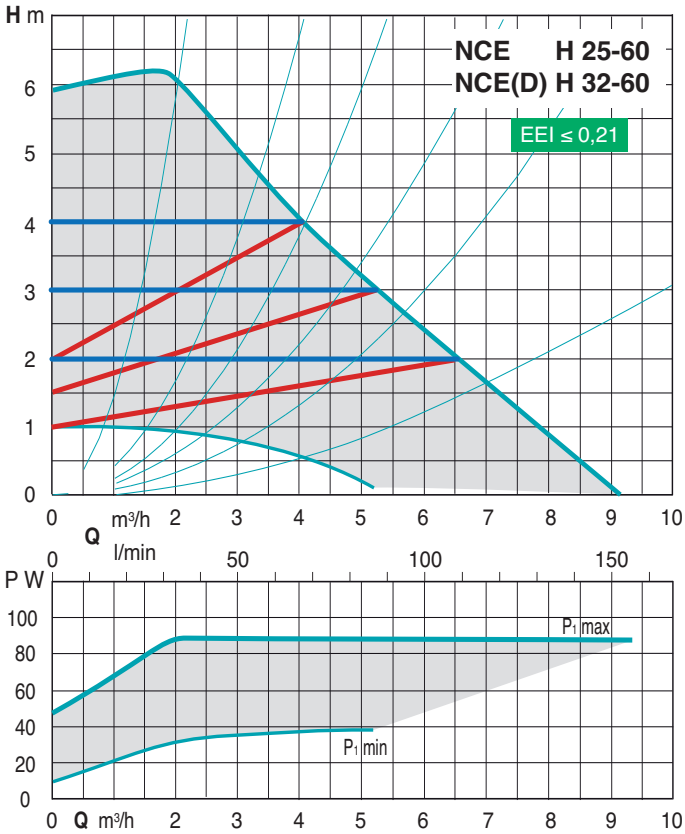

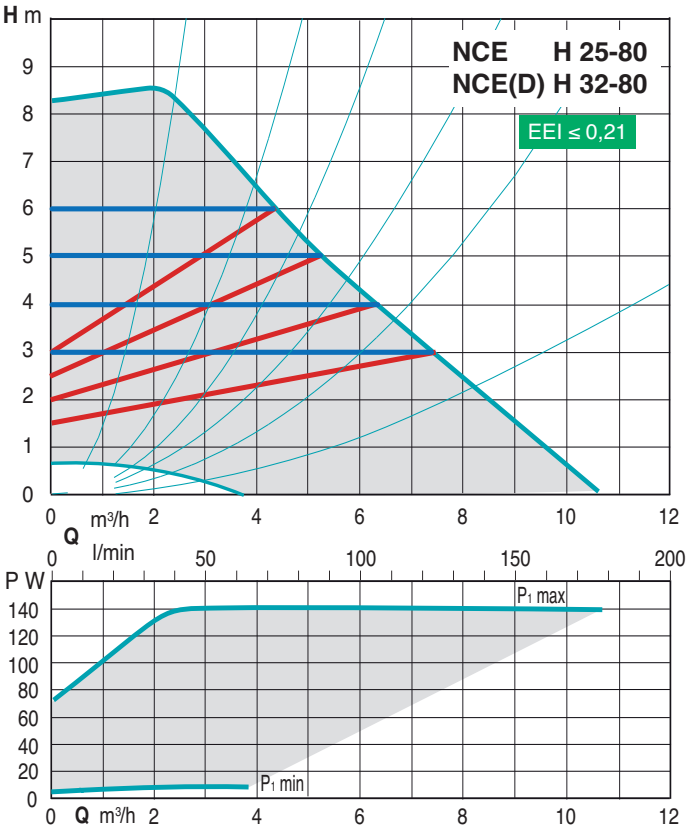

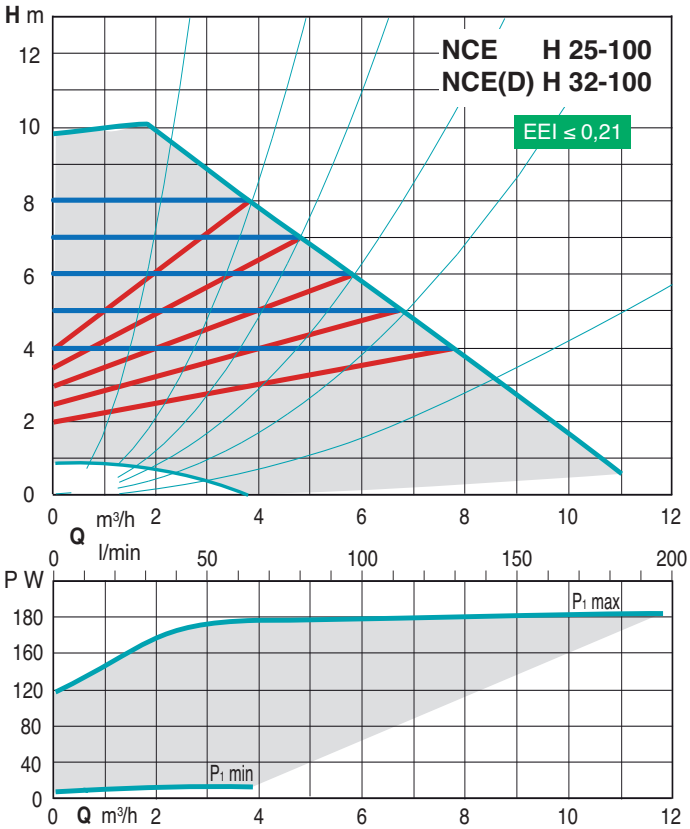

Characteristic curves

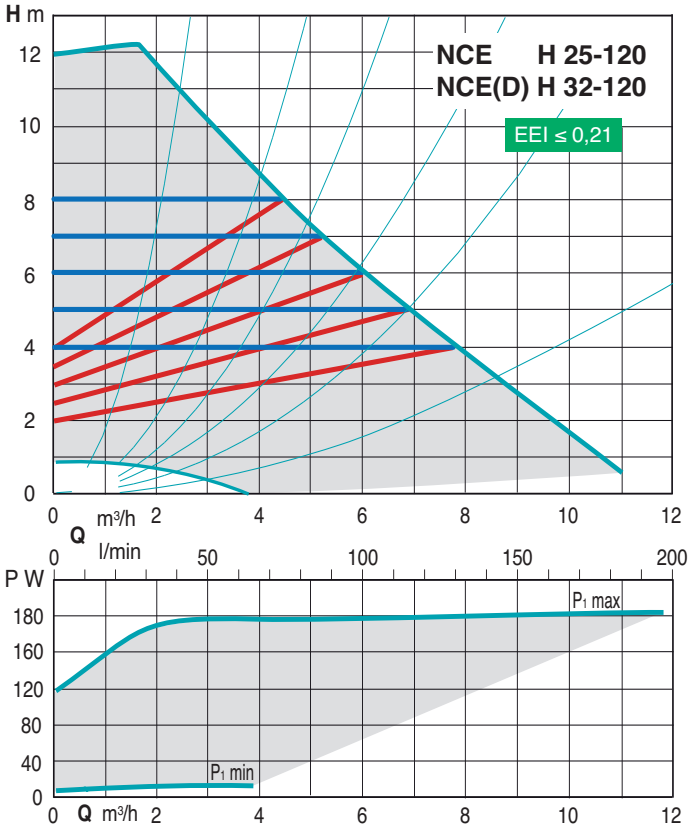

Materials

Component	Pos.	Material
Pump casing	1	Cast iron GJL 200 EN 1561
Impeller	2	Composite
Shaft	3	Stainless steel
Bearings	4	Carbon
Thrust bearing	5	Ceramic
Rotor	6	Stainless steel jacket
Winding	7	Copper wire
Electronic card	8	-
Gasket	9	EPDM

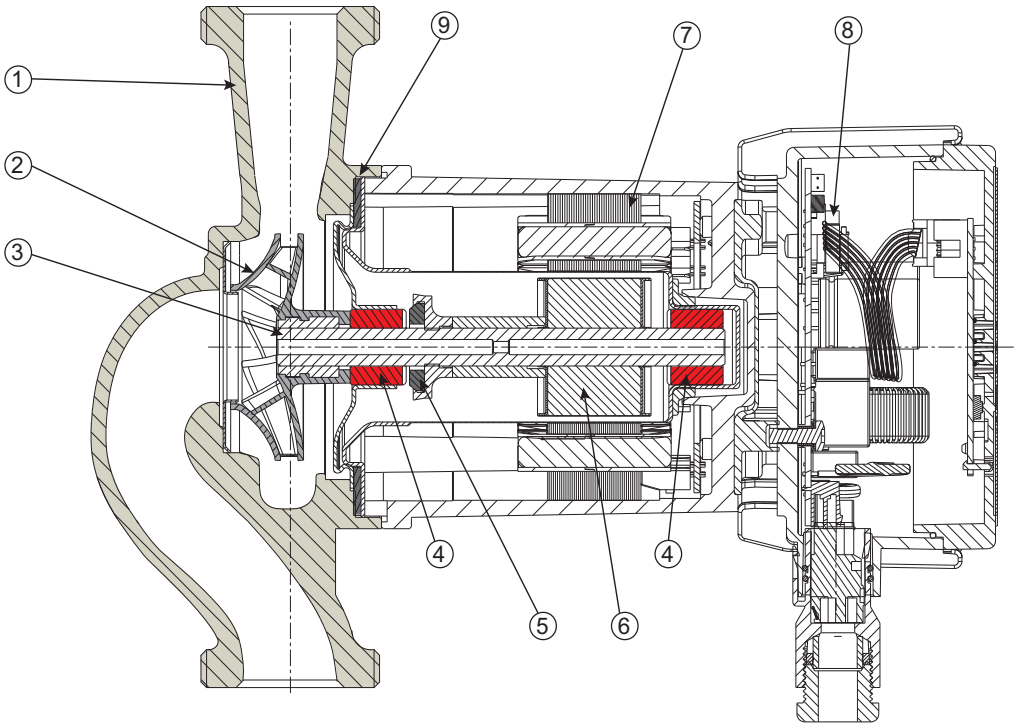

NCE H

Energy saving circulationg pumps

calpeda

Examples of installations

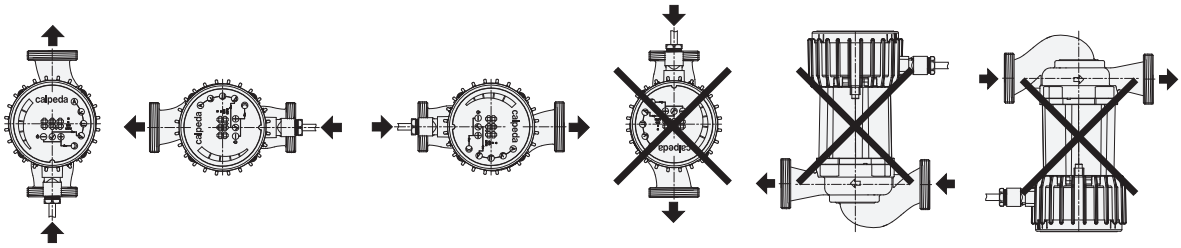

Dimensions and weights

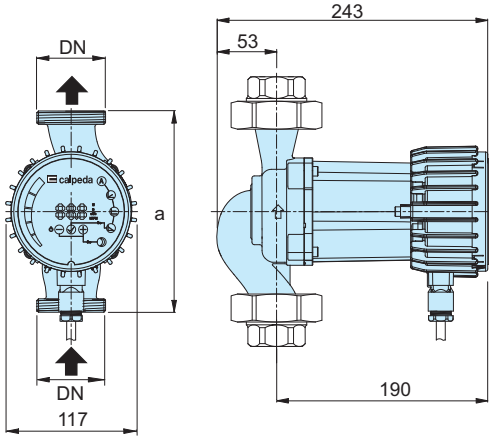

TYPE	DN	H	Q	1~ 230 V		P1		a	
		m	m³/h	A min	A max	W min	W max	mm	kg
NCE H 25-40/180 **NCE H 32-40/180**	G 1 1/2 G 2	4	5	0,1	0,5	10	60	180	4 4,1
NCE H 25-60/180 **NCE H 32-60/180**	G 1 1/2 G 2	6	7,5	0,1	0,75	10	90	180	4 4,1
NCE H 25-80/180 **NCE H 32-80/180**	G 1 1/2 G 2	8	9	0,1	1,15	10	140	180	4 4,1
NCE H 25-100/180 **NCE H 32-100/180**	G 1 1/2 G 2	10	11	0,1	1,5	10	180	180	4 4,1
NCE H 25-120/180 **NCE H 32-120/180**	G 1 1/2 G 2	12	15	0,1	1,5	10	180	180	4 4,1

Unions (on request)

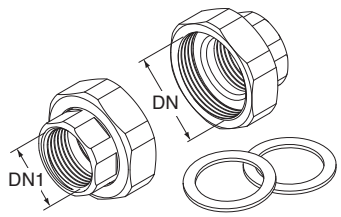

		DN	DN1
KIT G 1 - G 1/2	(NCE . 15..)	G 1	G 1/2
KIT G 1 1/2 - G 1	(NCE . 25..)	G 1 1/2	G 1
KIT G 2 - G 1 1/4	(NCE . 32..)	G 2	G 1 1/4

NCED H Energy saving circulationg pumps

Examples of installations

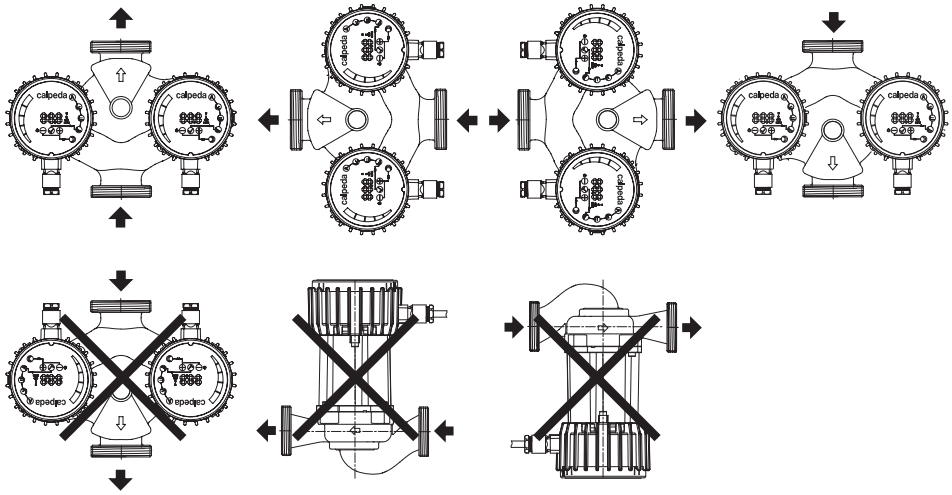

Dimensions and weights

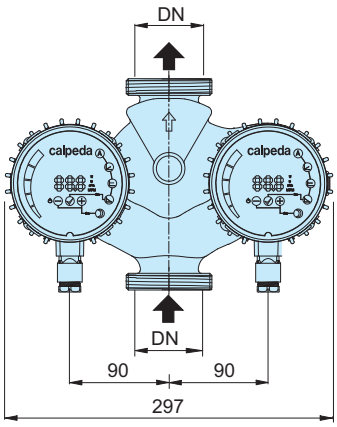

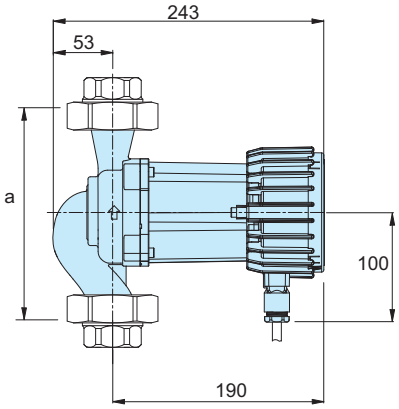

TYPE	DN	H m	Q m³/h	1~ 230 V A min	A max	P1 W min	W max	a mm	kg
NCED H 32-40/180	G 2	4	5	0,1	0,5	10	60	180	8
NCED H 32-60/180	G 2	6	7,5	0,1	0,75	10	90	180	8
NCED H 32-80/180	G 2	8	9	0,1	1,15	10	140	180	8
NCED H 32-100/180	G 2	10	11	0,1	1,5	10	180	180	8
NCED H 32-120/180	G 2	12	15	0,1	1,5	10	180	180	8

Unions (on request)

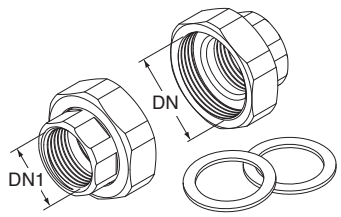

TYPE	DN	DN1
KIT G 1 - G 1/2 (NCE . 15..)	G 1	G 1/2
KIT G 1 1/2 - G 1 (NCE . 25..)	G 1 1/2	G 1
KIT G 2 - G 1 1/4 (NCE . 32..)	G 2	G 1 1/4

NCE(D) H.F Energy saving circulating pumps with flanges

ErP READY 2015 — APPLIES TO EUROPEAN DIRECTIVE FOR ENERGY RELATED PRODUCTS

Construction
Energy saving variable speed circulating pump driven by a permanent magnet synchronous motor (pm) controlled by on board inverter.

Applications
Heating and conditioning systems.

Operating conditions
- Liquid temperature from +2 °C to +110 °C
- Ambient temperature from 0 °C to +40 °C
- Maximum permissible working pressure: 10 bar
- Storage: -20°C/+70°C max. relative humidity 95% at 40 °C
- Certifications: in conformity with CE requirements
- Sound pressure ≤ 40 dB (A).
- Minimum suction pressure: - 0,05 bar at 75 °C
  - 0,28 bar a 90 °C.
- Maximum glycol quantity: 20%.
- EMC according to: EN 55014-1, EN 55014-2
  EN 61000-3-2, EN 61000-3-2.
- Connections: Flanges according to PN 6/10, EN 1092-2, DN 32, 40, 50.
- The benchmark for most efficient circulators is EEI ≤ 0,20.

Motor
Synchronous motor with permanent magnet.
- Motor: variable speed
- Standard voltage: single-phase 230 V (-10%;+6%)
- Frequency: 50/60 Hz
- Protection: IP 44
- Insulation class: F
- Overload protection (integrated).
- Cable: phases and neutral.
- Constructed in accordance with: EN 60335-1, EN 60335-2-51.

Special features on request
Additional module (included with NCEDH. F):
- Modbus
- Eternet
- analog input 0-10V
- remote on/off input
- output relay

Designation

NCE(D) H 40 F - 60 / 220

- Series
- Twin pumps version
- Version
- DN ports in mm
- With flanges
- Max. head in dm
- connection size mm

Features

Smart pump
NCE H.F adapt its functions to the system: the circulator measures the pressure and the flow and adjusts the speed to the selected pressure.

Easy use
There are different operating modes selectable from the control panel.

NCE(D) H.F Energy saving circulating pumps with flanges

Operating modes

Automatic mode
(factory setting):
In this mode the pump automatically sets the operating pressure, depending on the hydraulic system. This mode is recommended in most systems.

Proportional pressure mode:
The circulator changes the pressure propotionally to the current flow.
The pressure value can be adjusted with the + and – buttons.

Constant pressure mode:
The circulator mantains the pressure constant when the reference flow changes.
The pressure value can be adjusted with the + and – buttons.

Fixed speed mode:
The circulator works with constant curve and the curve could be changed using + e – buttons.

Night mode:.
When the liquid temperature fall by 15-20°C the pump automatically swiches to night mode, in practice the circulator works at minimum curve.
When the temperature rises again the pump comes back to the selected mode
The night mode could be selected with any operating mode.

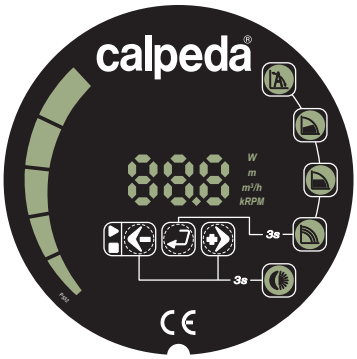

Operating mode-control panel

NCE(D) H.F could works in:
- automatic mode
- proportional pressure mode
- constant pressure mode
- fixed speed mode
- night mode

The night mode could be selected with any operating mode.

Coverage chart

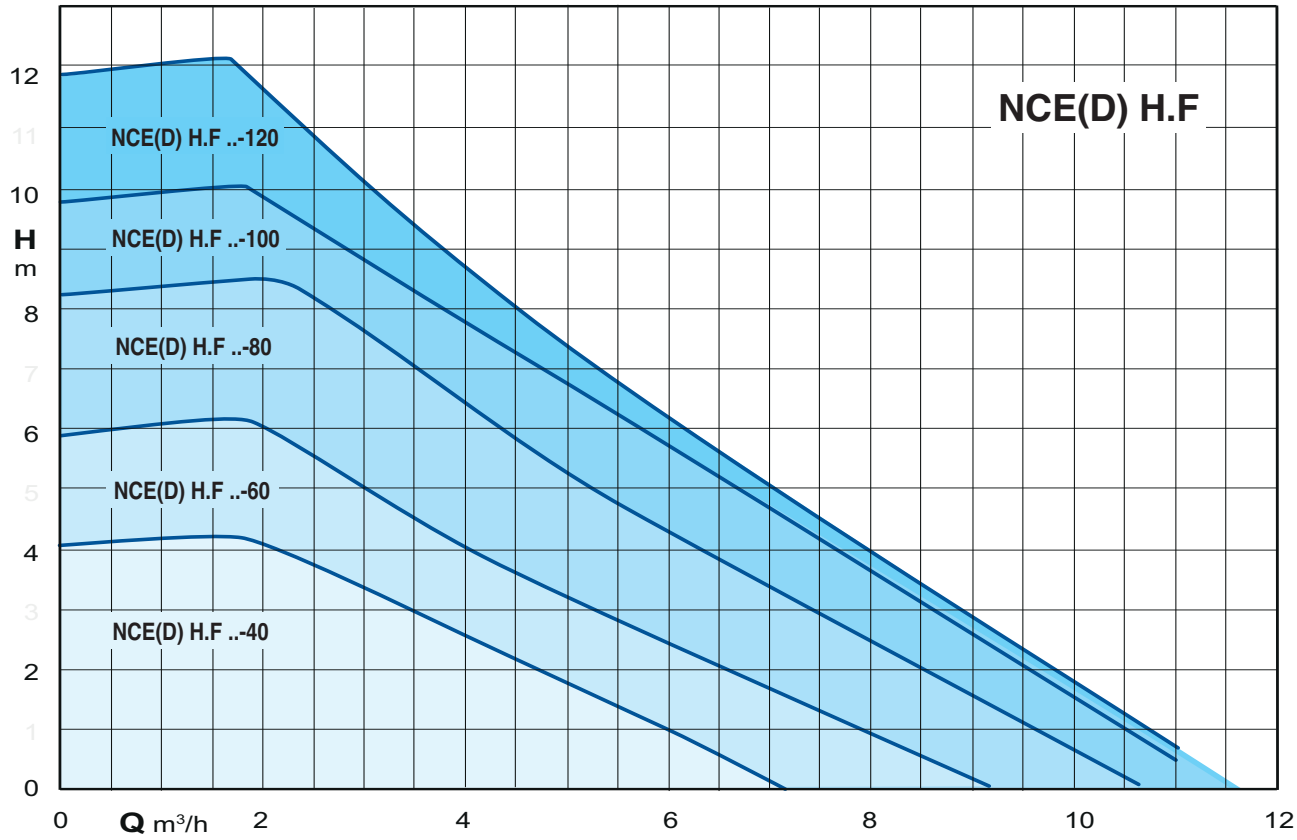

NCE(D) H.F Energy saving circulating pumps with flanges

calpeda

Characteristic curves

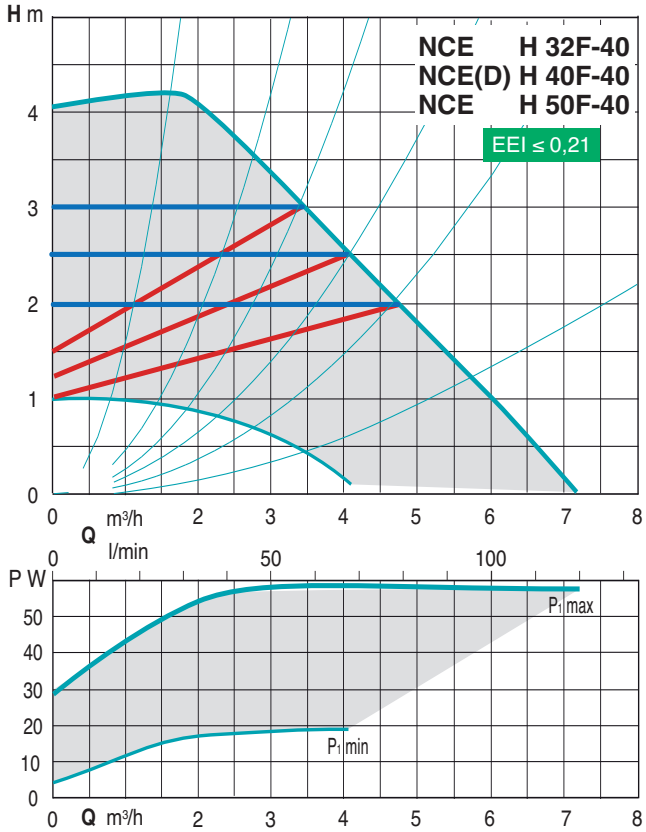

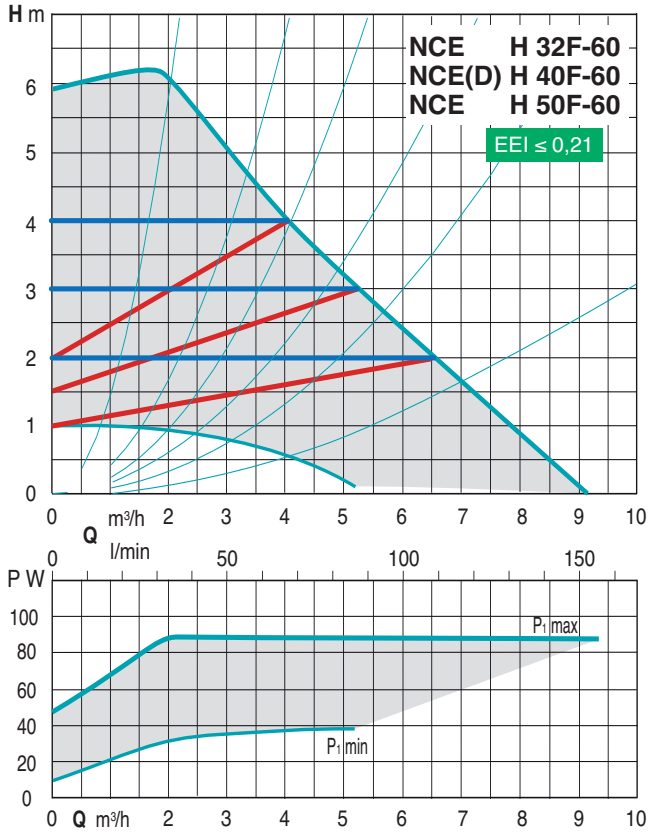

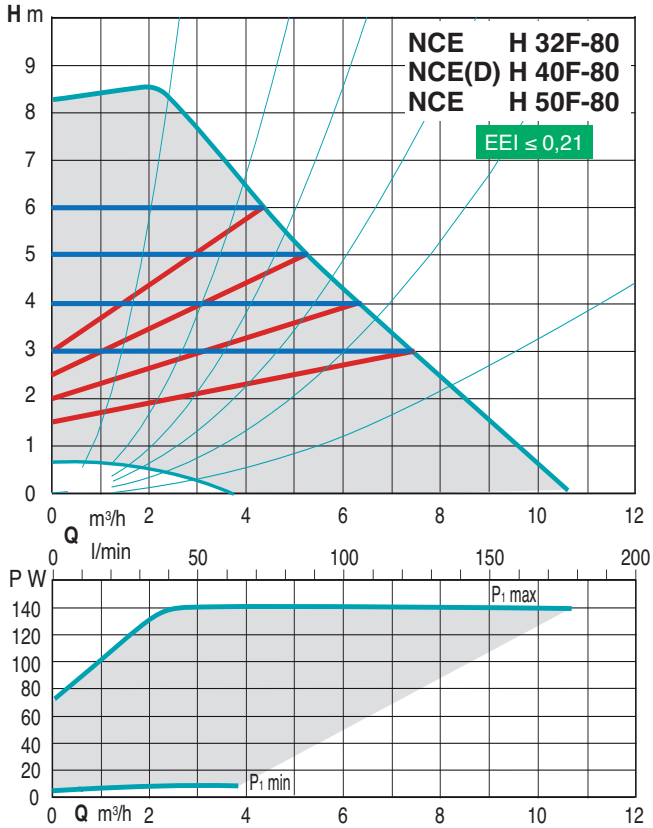

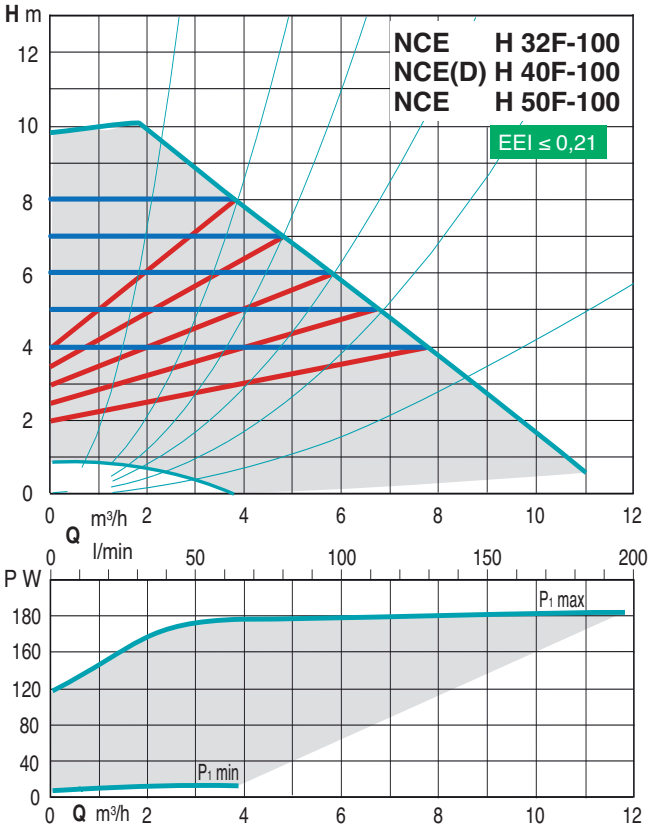

NCE(D) H.F Energy saving circulating pumps with flanges

Characteristic curves

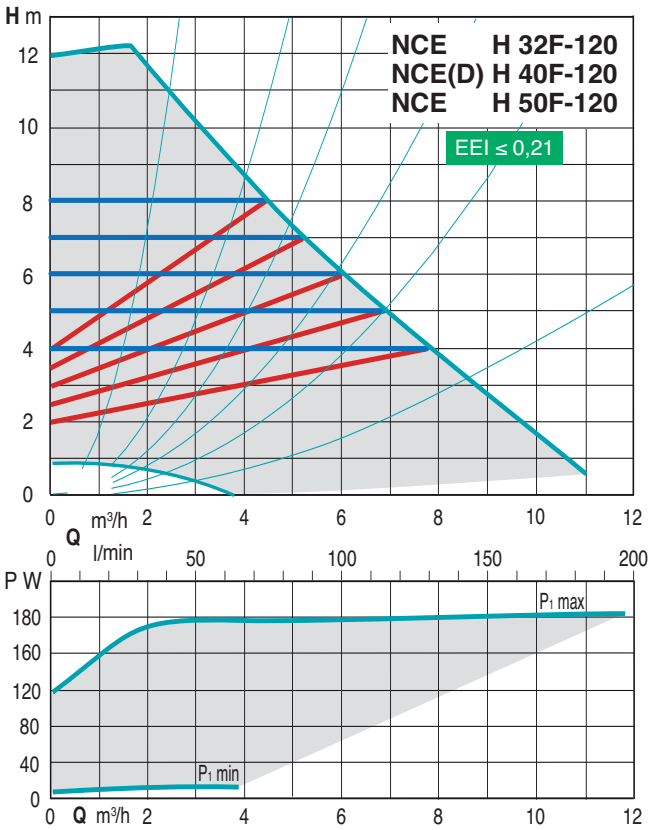

Materials

Component	Pos.	Material
Pump casing	1	Cast iron GJL 200 EN 1561
Impeller	2	Composite
Shaft	3	Stainless steel
Bearings	4	Carbon
Thrust bearing	5	Ceramic
Rotor	6	Stainless steel jacket
Winding	7	Copper wire
Electronic card	8	-
Gasket	9	EPDM

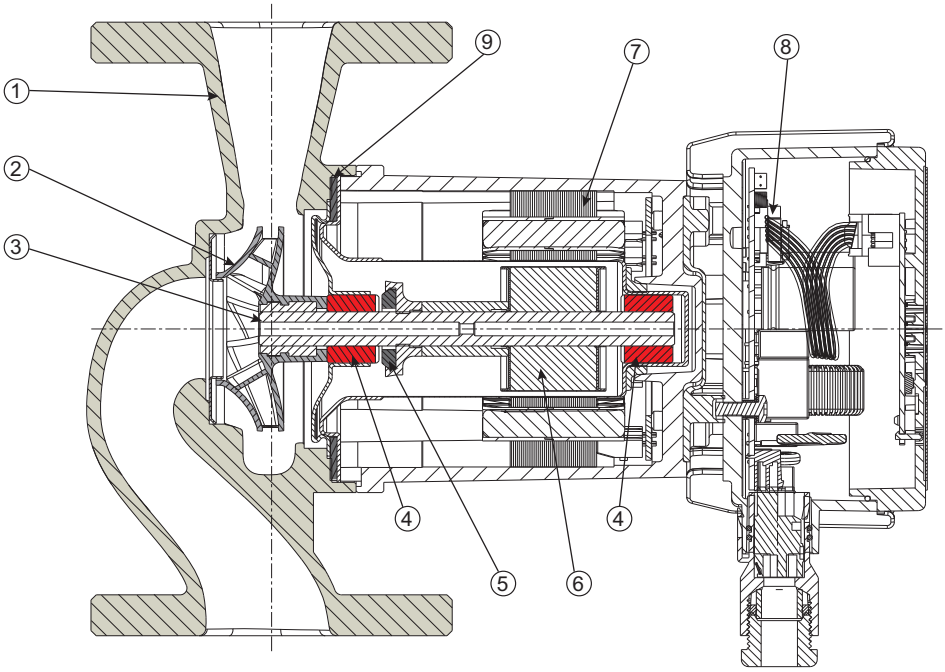

NCE(D) H.F Energy saving circulating pumps with flanges

Examples of installations

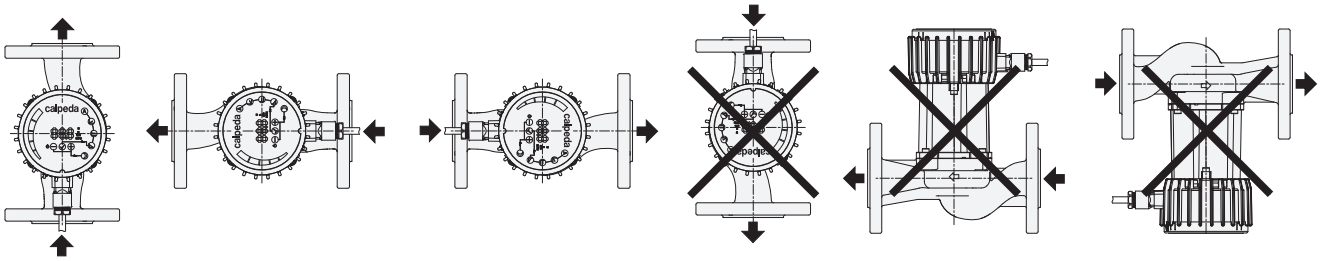

Dimensions and weights

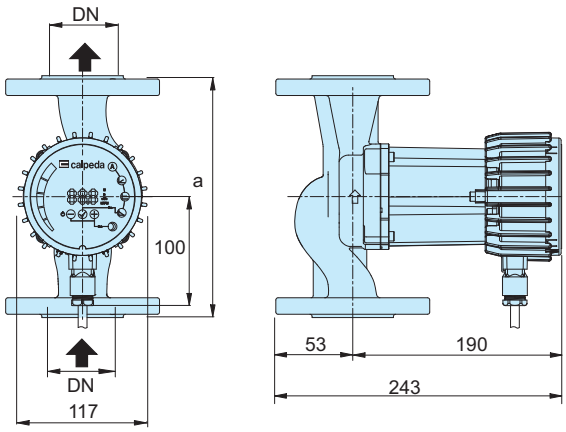

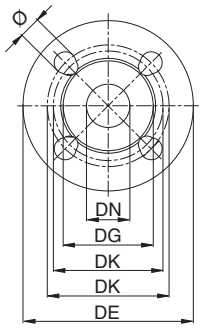

TYPE	DN	H m	Q m³/h	1~ 230 V A min	A max	P1 W min	W max	a mm	kg
NCE H 32F-40/220	32	4	5	0,1	0,5	10	60	220	7,4
NCE H 40F-40/220	40							220	8,5
NCE H 50F-40/240	50							240	9,8
NCE H 32F-60/220	32	5	7,5	0,1	0,75	10	90	220	7,4
NCE H 40F-60/220	40							220	8,5
NCE H 50F-60/240	50							240	9,8
NCE H 32F-80/220	32	8	9	0,1	1,15	10	140	220	7,4
NCE H 40F-80/220	40							220	8,5
NCE H 50F-80/240	50							240	9,8
NCE H 32F-100/220	32	10	11	0,1	1,5	10	180	220	7,4
NCE H 40F-100/220	40							220	8,5
NCE H 50F-100/240	50							240	9,8
NCE H 32F-120/220	32	12	15	0,1	1,5	10	180	220	7,9
NCE H 40F-120/220	40							220	8,7
NCE H 50F-120/240	50							240	10

DN	DE	DK	DG	holes N.	holes Ø
32	140	90/100	74	4	14/19
40	150	100/110	80	4	14/19
50	165	110/125	90	4	14/19

NCE(D) H.F Energy saving circulating pumps with flanges

Examples of installations

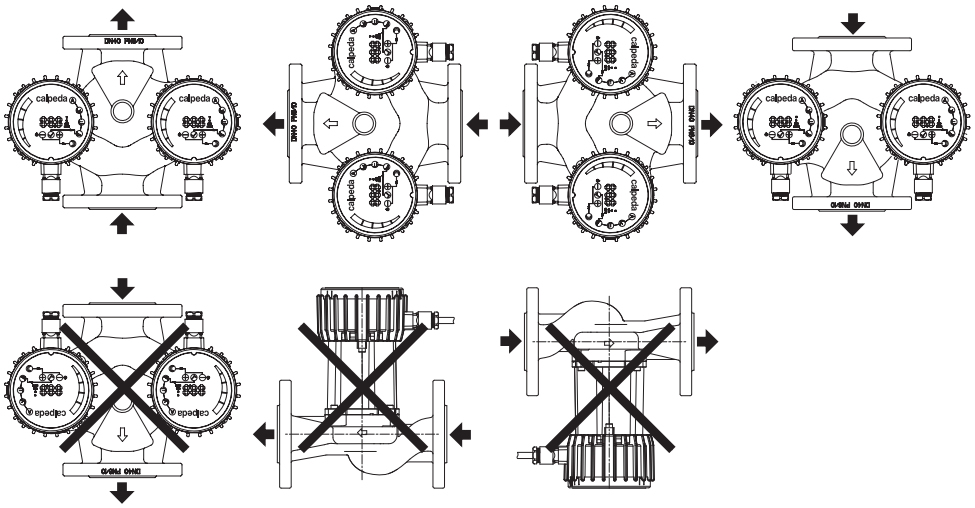

Dimensions and weights

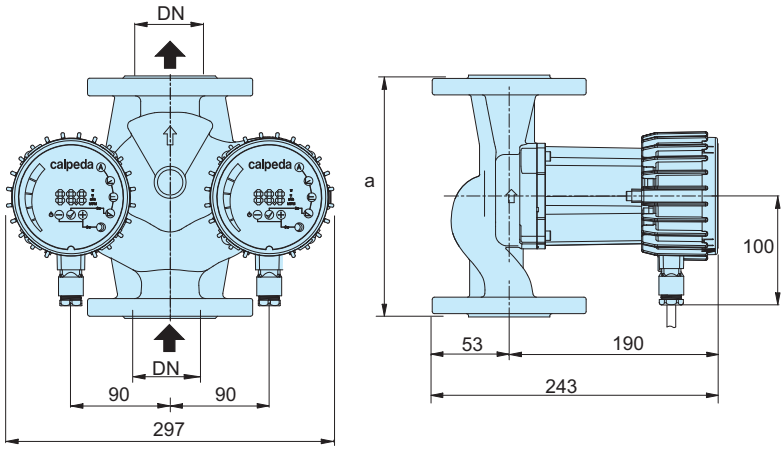

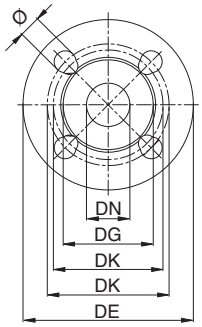

TYPE	DN	H	Q	1~ 230 V		P1		a	
		m	m³/h	A min	A max	W min	W max	mm	kg
NCED H 40F-40/220	40	4	5	0,1	0,5	10	60	220	11,3
NCED H 40F-60/220	40	5	7,5	0,1	0,75	10	90	220	11,3
NCED H 40F-80/220	40	8	9	0,1	1,15	10	140	220	11,3
NCED H 40F-100/220	40	10	11	0,1	1,5	10	180	220	11,3
NCED H 40F-120/220	40	12	15	0,1	1,5	10	180	220	11,3

DN	DE	DK	DG	holes	
				N.	Ø
32	140	90/100	74	4	14/19
40	150	100/110	80	4	14/19
50	165	110/125	90	4	14/19

NCE EL

Energy saving circulating pumps for solar systems

ErP READY 2015 — APPLIES TO EUROPEAN DIRECTIVE FOR ENERGY RELATED PRODUCTS

Construction
Energy saving variable speed circulating pump driven by a permanent magnet synchronous motor (pm) controlled by on board inverter.

Applications
Solar thermal systems.

Operating conditions
- Liquid temperature from +2 °C to +110 °C
- Ambient temperature from 0 °C to +40 °C
- Maximum permissible working pressure: 10 bar
- Storage: -20°C/+70°C max. relative humidity 95% at 40 °C
- Certifications: in conformity with CE requirements
- Sound pressure ≤ 43 dB (A).
- Minimum suction pressure: 0,3 bar at 50 °C
  1,0 bar at 95 °C
  1,5 bar at 110 °C
- Maximum glycol quantity: 40%
- EMC according to: EN 55014-1, EN 61000-3-2, EN 55014-2
- Connections: threaded ports ISO 228: G 1, G 1 1/2.
- The benchmark for most efficient circulators is EEI ≤ 0,20.
- Minimun power: 3 W.

Motor
Synchronous motor with permanent magnet.
- Motor: variable speed
- Standard voltage: single-phase 230 V (-10%;+6%)
- Frequency: 50-60 Hz
- Protection: IP 44
- Insulation class: H
- Class II appliance
- Overload protection (jammed rotor):
  1) automatic protection with electronic rotor release
  2) Overload thermal protector
- Cable: phases and neutral
- Constructed in accordance with: EN 60335-1, EN 60335-2-51.

Special features on request
Brass or cast iron unions.

Designation

NCE EL 25 - 60 / 180

- Series
- Version
- DN ports in mm
- Max. head in dm
- connection size mm

Features

Compact design
The space saving **NCE EL** is a very compact circulating pump, allows inr easy installation in small domestic heating systems.

Easy to install and to adjust
Installing the **NCE EL** is considerably simplified by the quick setting and power installation plug.

Reliable
Like all our electronic circulating pumps, the **NCE EL** features the patented self-cleaning square chamber design, which eliminates any possibility of rotor blockage.
Ceramic shaft.
Hydraulics components are completely painted with cataphoresis.
Program for automatic routine vent and release.

Easy use
Operating range with fixed curves from 0,6 m to 7 m; possibility to choose proportional pressure curve or selection of the optimum working point.

NCE EL

Energy saving circulating pumps for solar systems

Operating modes

PROPORTIONAL CURVE PROGRAMMING Δp-v
(GREEN LED)
Moving the switch to the 'P' setting will allow the pump to operate against a proportional performance curve. This feature ensures maximum energy efficiency.

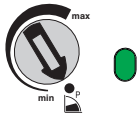

MANUAL PROGRAMMING
(BLUE LED)
Setting the switch in any position between the MIN and MAX points, the most suitable operating curve for the installation is manually selected.

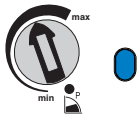

WARNING!
- The red LED indicates that the pump is not rotating but is still under tension.
- White flashing LED : plant degassing requirement, air in the system.

Characteristic curves

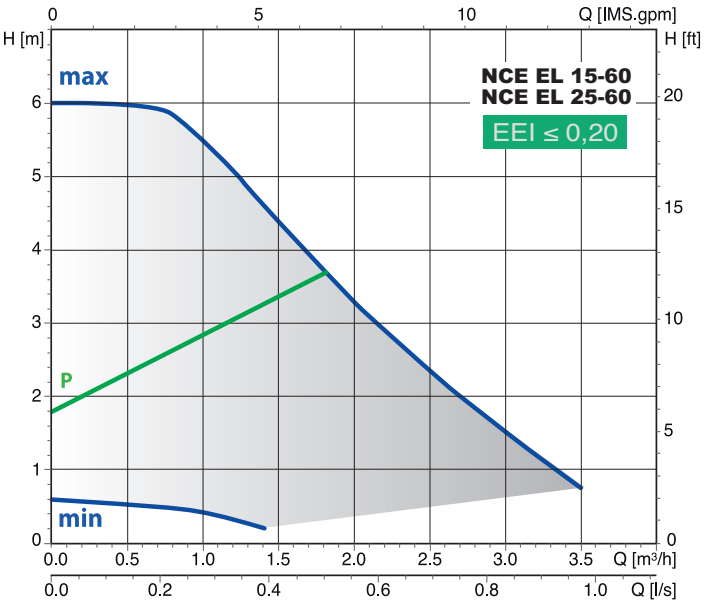

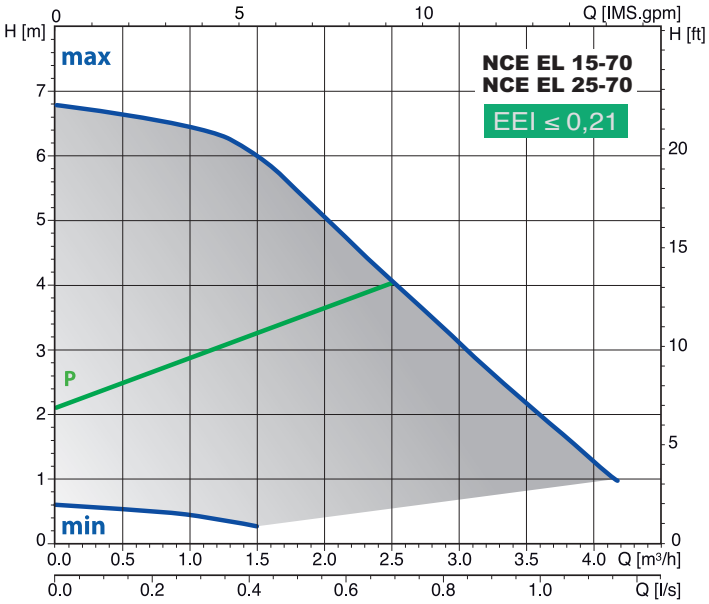

P proportional curve
min-max n fixed curves

NCE EL

Energy saving circulating pumps for solar systems

calpeda

Materials

Component	Pos.	Material
Pump casing	1	Cast iron GJL 200 EN 1561
Impeller	2	Composite
Shaft	3	Ceramic
Bearings	4	Carbon
Thrust bearing	5	Ceramic
Rotor	6	Composite / Ferrite
Winding	7	Copper wire
Electronic card	8	-
Gasket	9	EPDM

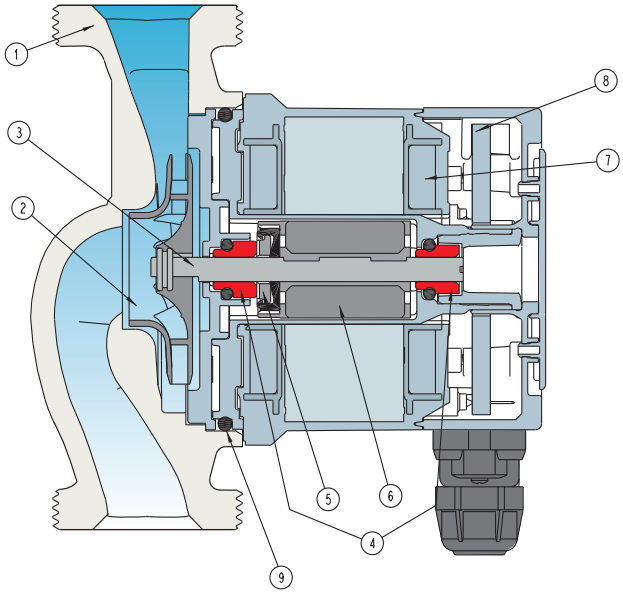

Dimensions and weights

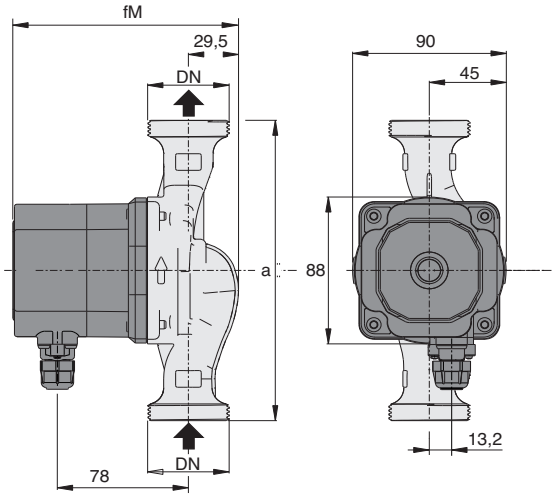

TYPE	DN	230V A max	230V A min	P1 W max	P1 W min	mm fm	mm a	kg
NCE EL 15-60/130/A	G 1	0,33	0,03	42	3	134	130	1,67
NCE EL 25-60/130/A	G 1 1/2							1,81
NCE EL 25-60/180/A	G 1 1/2	0,33	0,03	42	3	134	180	1,96
NCE EL 15-70/130	G 1	0,44	0,03	56	3	144	130	1,91
NCE EL 25-70/130	G 1 1/2							2,05
NCE EL 25-70/180	G 1 1/2	0,44	0,03	56	3	144	180	2,20

Unions (on request)

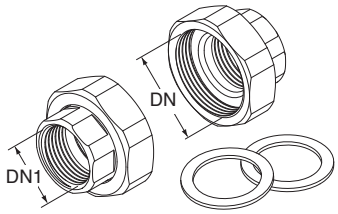

	DN	DN1
KIT G 1 - G 1/2 (NCE . 15..)	G 1	G 1/2
KIT G 1 1/2 - G 1 (NCE . 25..)	G 1 1/2	G 1
KIT G 2 - G 1 1/4 (NCE . 32..)	G 2	G 1 1/4

Examples of installations

Installation

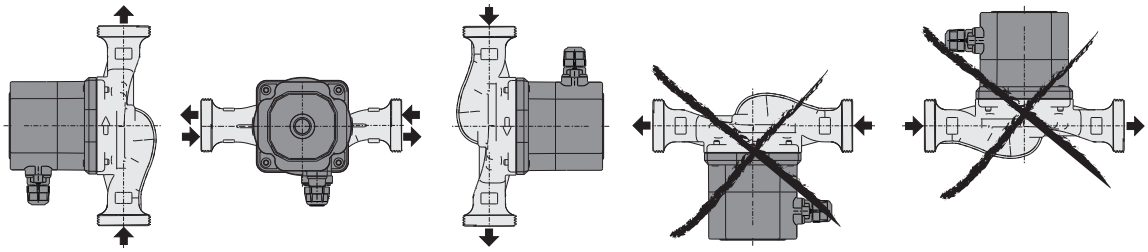

Terminal box arrangement (on request)

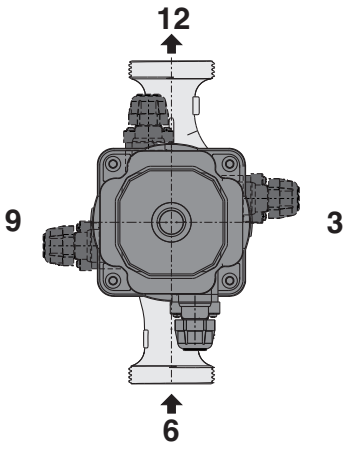

NCE PS

Energy saving circulating pumps for sanitary hot water

Construction

Energy saving variable speed circulating pump driven by a permanent magnet synchronous motor (pm) controlled by on board inverter. Bronze pump casing.

Applications

Sanitary hot water systems.

Operating conditions

- Liquid temperature from +5 °C to +65 °C
- Ambient temperature from 0 °C to +40 °C
- Maximum permissible working pressure: 10 bar
- Storage: -20°C/+70°C max. relative humidity 95% at 40 °C
- Certifications: in conformity with CE requirements
- Sound pressure ≤ 38 dB (A).
- Minimum suction pressure: - 0,05 bar at 75 °C
  - 0,28 bar a 90 °C.
- Maximum glycol quantity: 20%.
- EMC according to: EN 55014-1, EN 55014-2
  EN 61000-3-2, EN 61000-3-2.
- Connections: threaded ports ISO 228: G 1 1/4, G 1 1/2.

Designation

NCE PS 25 - 60 / 180

- Series
- Version for sanitary hot water
- DN ports in mm
- Max. head in dm
- connection size mm

Motor

Synchronous motor with permanent magnet.
- Motor: variable speed
- Standard voltage: single-phase 230 V (-10%;+6%)
- Frequency: 50-60 Hz
- Protection: IP 44
- Insulation class: F
- Overload protection (integrated).
- Cable: phases and neutral.
- Constructed in accordance with: EN 60335-1, EN 60335-2-51.

Special features on request

The NCE PSR version is equipped with an additional module that allows to control the pump with an analog signal 0-10V.
Brass unions.

Features

Easy adjustment

The adjustment is simple and intuitive thanks to the LED indicator.

Easy use

3 proportional curves and 3 fixed speed curves are available and selectable by the button.

NCE PS

Energy saving circulating pumps for sanitary hot water

Operating modes

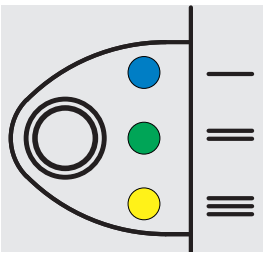

Operating functions - control buttons.
NCE PS circulator could work:
- with proportional pressure curves
- with fixed speed curves

PROPORTIONAL CURVE PROGRAMMING Δp-v

(P1 BLUE LED blinking light)
(P2 GREEN LED blinking light)
(P3 YELLOW LED blinking light)

Push repeatedly the button to select the proportional curve.
The color changes depending on the selected curve.
This operating mode guarantees the maximum energy efficiency.

FIXED SPEED CURVE PROGRAMMING

(I BLUE LED light)
(II GREEN LED light)
(III YELLOW LED light)

If you push the button for 5 seconds the pump adopt the fixed speed curve. The color changes depending on the selected curve. (to replace standard 3-speed circulators).

Coverage chart

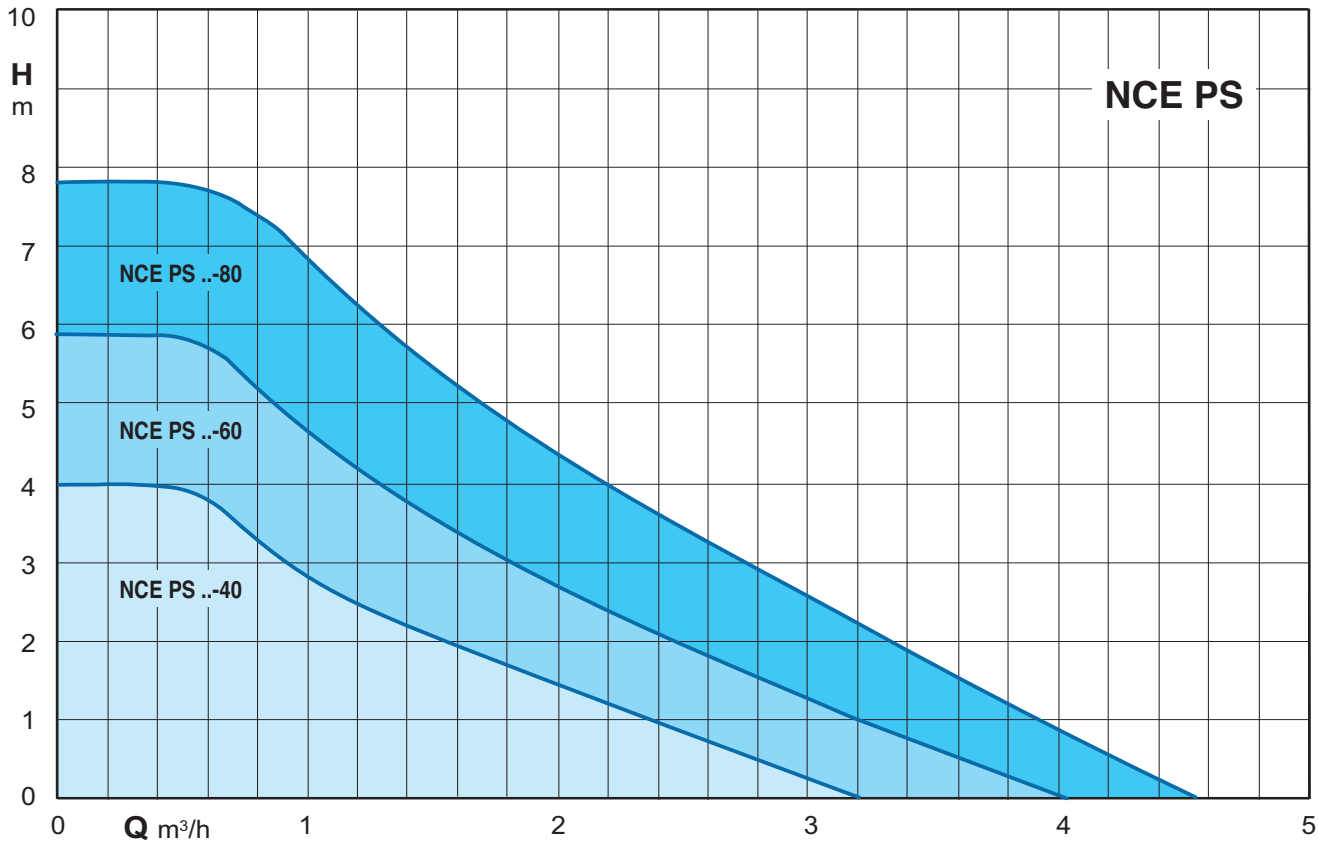

Characteristic curves

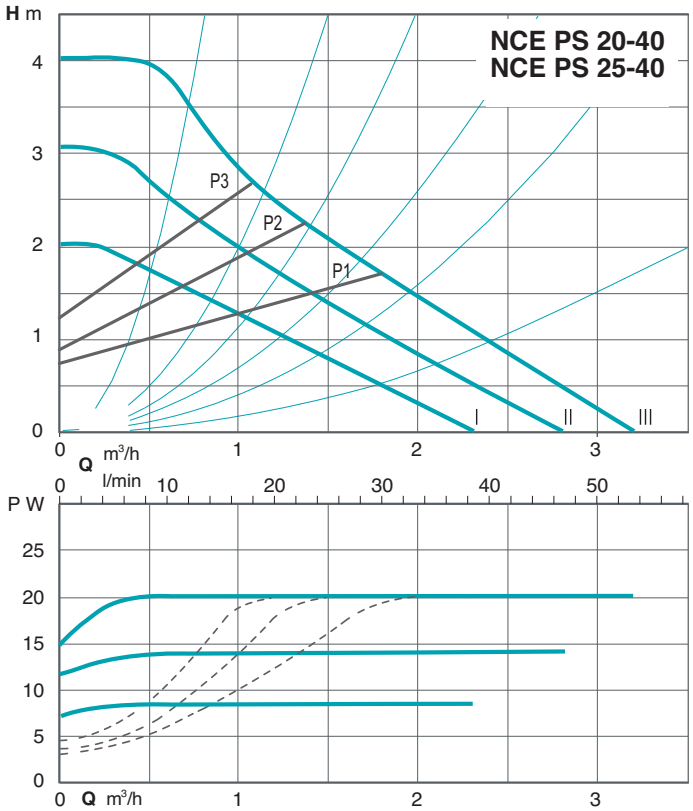

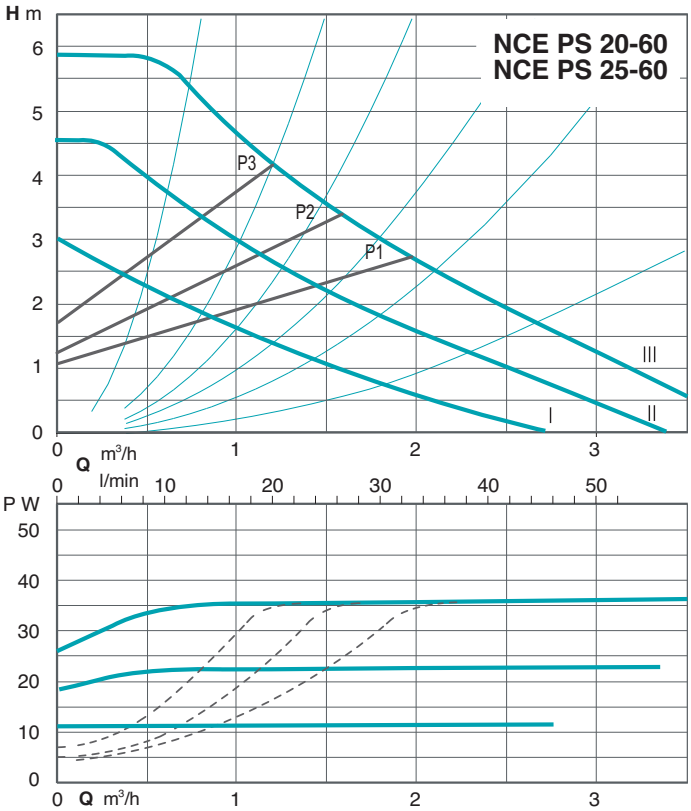

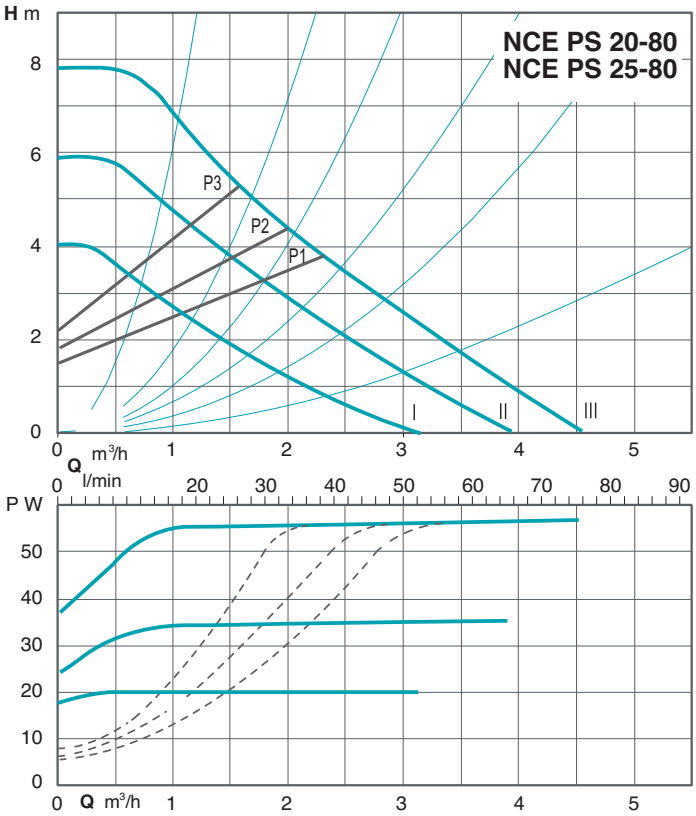

NCE PS

Energy saving circulating pumps for sanitary hot water

calpeda

Materials

Component	Pos.	Material
Pump casing	1	Bronze
Impeller	2	Composite
Shaft	3	Stainless steel AISI 420
Bearings	4	Carbon
Thrust bearing	5	Ceramic
Rotor	6	Stainless steel jacket
Winding	7	Copper wire
Electronic card	8	-
Gasket	9	EPDM

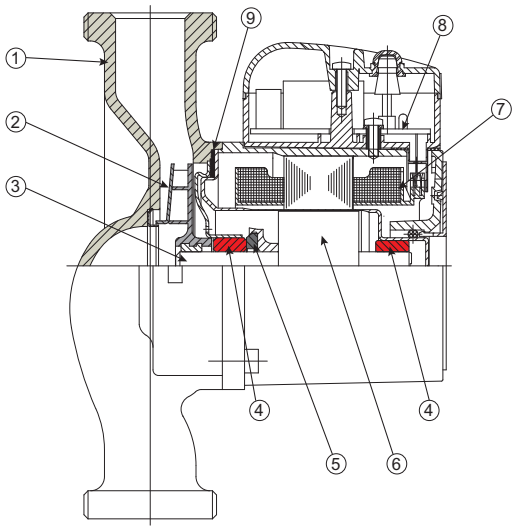

Examples of installations

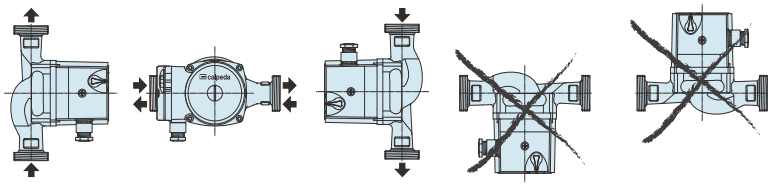

Dimensions and weights

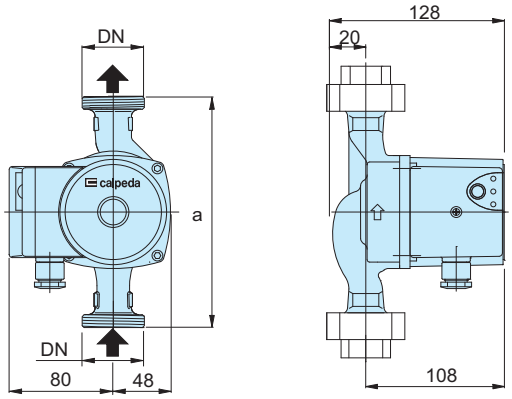

TYPE	DN	H m	Q m³/h	1~ 230 V A min	A max	P1 W max	a mm	kg
NCE PS 20-40/130 **NCE PS 25-40/130**	G 1 1/4 G 1 1/2	4	3	0,05	0,2	20	130	2,2 2,2
NCE PS 20-60/130 **NCE PS 25-60/130**	G 1 1/4 G 1 1/2	6	3,5	0,05	0,32	35	130	2,2 2,2
NCE PS 20-80/130 **NCE PS 25-80/130**	G 1 1/4 G 1 1/2	8	4	0,05	0,5	55	130	2,2 2,2

Unions (on request)

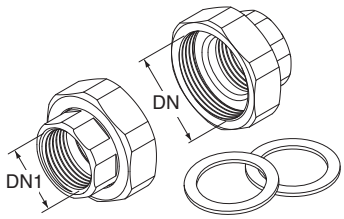

TYPE		DN	DN1
KIT G 1 - G 1/2	(NCE . 15..)	G 1	G 1/2
KIT G 1 1/4 - G 3/4	(NCE . 20..)	G 1 1/4	G 3/4
KIT G 1 1/2 - G 1	(NCE . 25..)	G 1 1/2	G 1
KIT G 2 - G 1 1/4	(NCE . 32..)	G 2	G 1 1/4

NCS3

Circulating pumps for sanitary hot water

Construction

Bronze pump casing with suction and delivery connections with the same diameter and on the same axis (in-line).
Stainless steel AISI 316 can.

Materials	NCS3 ..-40, -50	NCS3 ...-70
Pump casing	Bronze	Bronze
Impeller	Composite	Composite
Shaft	Stainless steel AISI 420	Stainless steel AISI 420
Bearings	Graphite	Ceramic

Applications

Circulation of sanitary hot water.

Operating conditions

Liquid temperature from +5 °C to +65 °C.
Ambient temperature up to 40 °C.
Sound pressure ≤ 43 dB (A).
Minimum suction pressure: 0,05 bar at 50 °C
Maximum permissible working pressure 10 bar.

Designation

NCS3 20 - 40 / 130

- Series
- DN ports in mm
- Max. head in dm
- connection size mm

Motor

2-pole induction motor, 50 Hz.
Three adjustable speeds.
NCS3: single-phase 230 V.
Insulation class H.
Protection IP 44.

Special features on request

Brass unions.

Coverage chart

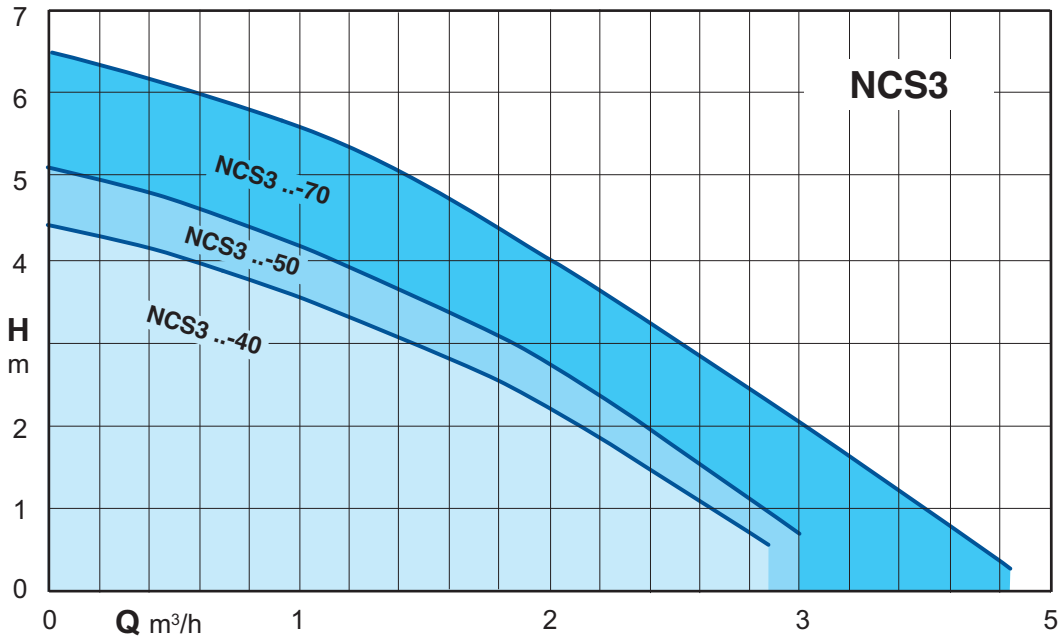

Characteristic curves

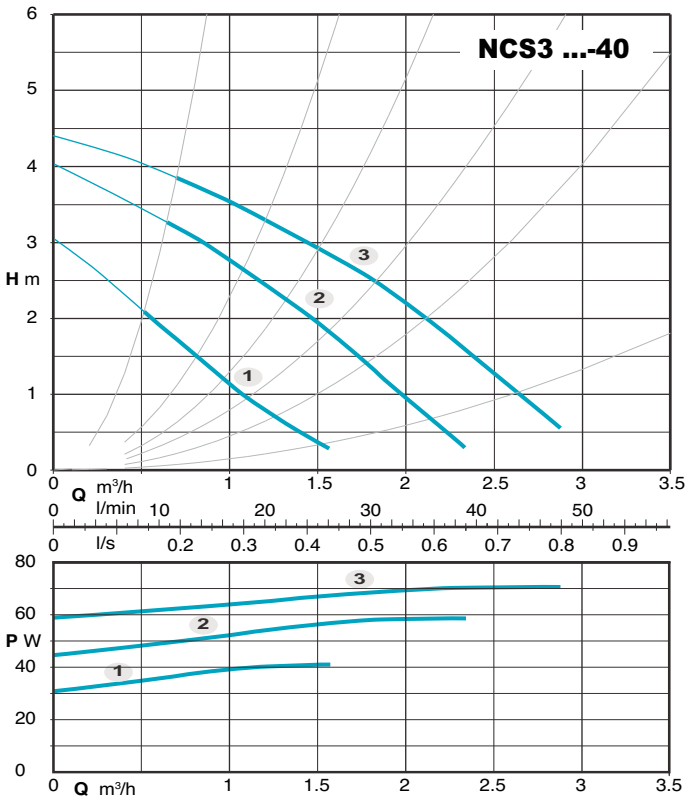

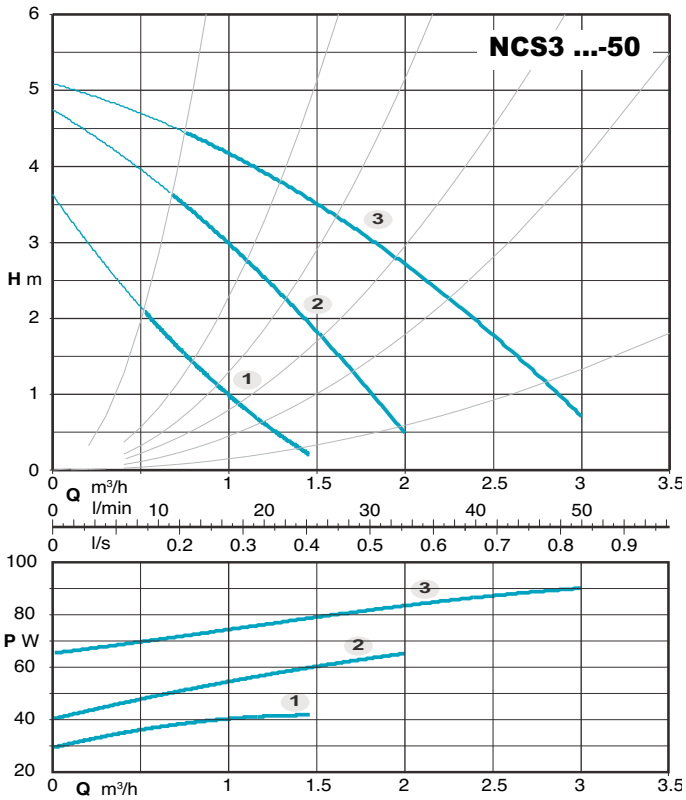

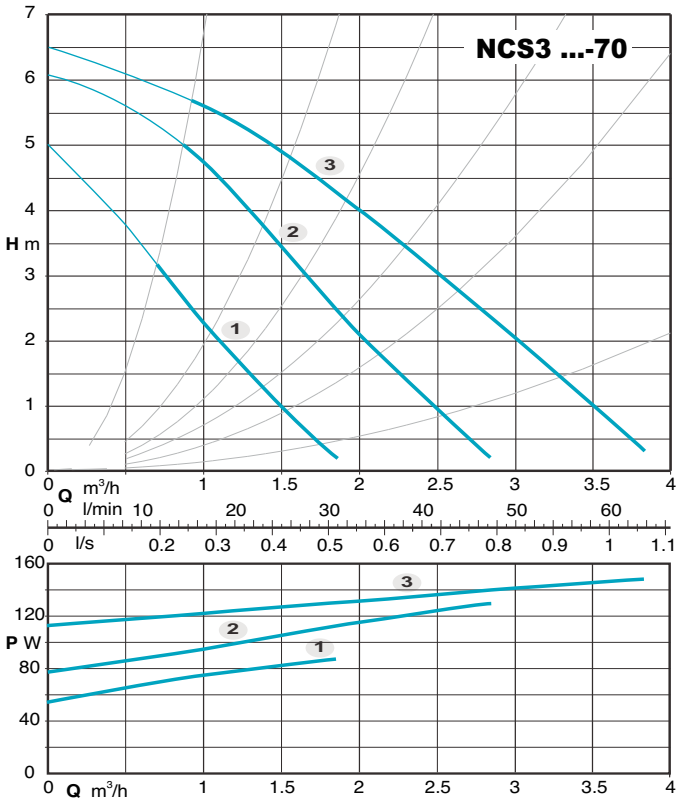

NCS3 Circulating pumps for sanitary hot water

Examples of installations

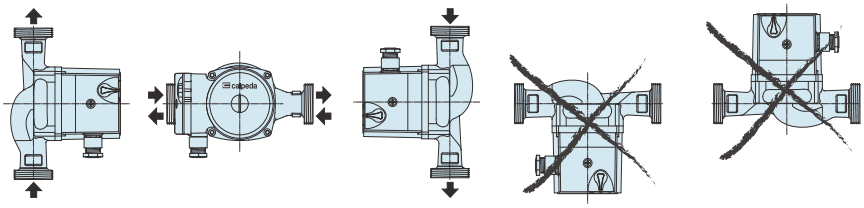

Dimensions and weights

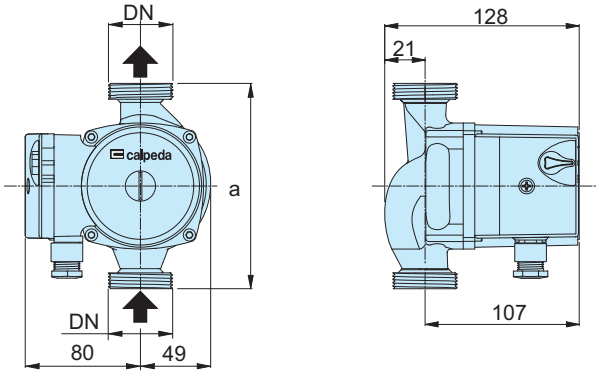

TYPE	DN	Pos.	P1 (W)	1x 230 V [A]	a mm	[kg]
NCS3 20-40/130 NCS3 25-40/130	G 1 1/4 G 1 1/2	3 2 1	70 59 41	0,30 0,26 0,18	130	2,3
NCS3 20-50/130 NCS3 25-50/130	G 1 1/4 G 1 1/2	3 2 1	91 65 42	0,38 0,28 0,18	130	2,5
NCS3 20-70/130 NCS3 25-70/130	G 1 1/4 G 1 1/2	3 2 1	148 128 87	0,66 0,59 0,41	130	3,8

Unions (on request)

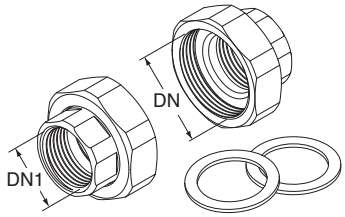

TYPE	DN	DN1
KIT G 1 1/4 - G 3/4 (NCS3 20..)	G 1 1/4	G 3/4
KIT G 1 1/2 - G 1 (NCS3 25..)	G 1 1/2	G 1