NGX

Self-Priming Pumps

Construction

Close-coupled self-priming shallow-well pump with built-in ejector.
A high-quality pump for domestic water supply. Designed with environmental considerations, featuring a stainless steel casing.

Applications

For drawing water out of a well.
For lifting water containing air or other gases.
For increasing water pressure from flooded suction applications.
As pressure boosting pump for central water systems with low pressure (follow local specifications if increasing network pressure).
For garden use.
For washing with a jet of water.

Operating conditions

Liquid temperature: 0 °C to +35 °C.
Ambient temperature up to +40 °C.
Suction lift up to 9 m.
Maximum permissible pressure in the pump casing: 8 bar.
Continuous duty.

Motor

2-pole induction motor, 50 Hz (n ≈ 2800 rpm).
NGX: three-phase 230/400 V ± 10%.
NGXM: single-phase 230 V ± 10%, with thermal protector.
Capacitor inside the terminal box.
Insulation class F.
Protection IP 54.
Classification scheme IE3 for three-phase motors from 0,75 kW.
Constructed in accordance with: EN 60034-1; EN 60034-30-1. EN 60335-1, EN 60335-2-41.

Special features on request

- Other voltages.
- Frequency 60 Hz (as per 60 Hz data sheet).

Materials

Component	Material
Pump casing	Cr-Ni steel 1.4301 EN 10088 (AISI 304)
Casing cover	Cr-Ni steel 1.4301 EN 10088 (AISI 304)
Impeller	Brass P-Cu Zn 40 Pb 2 UNI 5705 (PPO-GF20 (Noryl) for NGX 2/80,3/100,4/110)
Wear ring impeller-diffuser	Cr-Ni steel 1.4301 EN 10088 (AISI 304)
Diffuser Ejector	PPO-GF20 (Noryl) PPO-GF20 (Noryl)
Shaft	Chrome steel 1.4104 EN 10088 (AISI 430) Cr-Ni steel 1.4305 EN 10088 (AISI 303) for NGX 6
Mechanical seal	Carbon - Ceramic - NBR

Characteristic curves n ≈ 2800 rpm

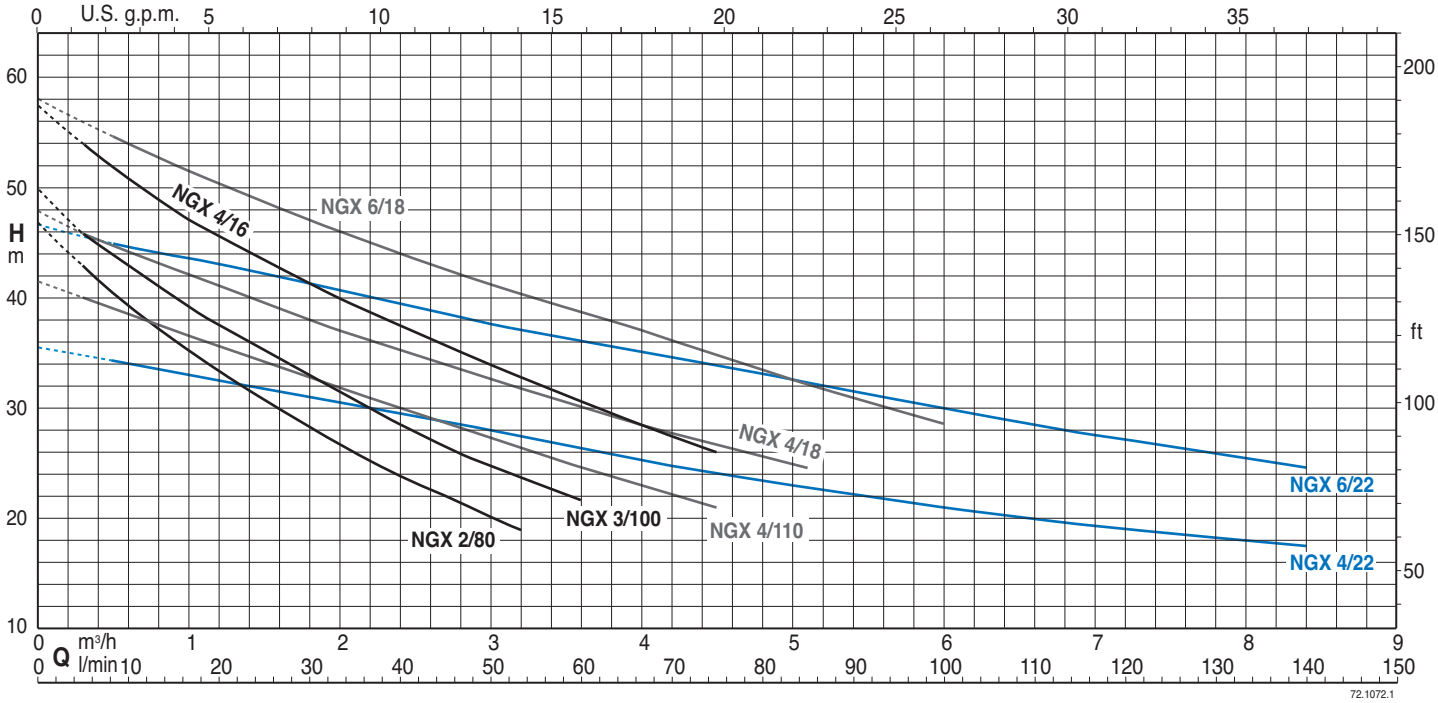

NGX

Self-Priming Pumps

Performance n ≈ 2800 rpm

3~	230V	400V	1~	230V	P1	P2		Q m³/h	0	0,3	1	2	2,4	3	3,2	3,6	4	4,5
		A	A	A	kW	kW	HP	l/min	0	5	16,6	33,3	40	50	53,3	60	66,6	75
NGX 2/80	2,8	1,6	**NGXM 2/80**	3,8	0,8	0,55	0,75	H m	46,8	43	35,2	26,7	23,9	20,2	19,1			
NGX 3/100	3	1,7	**NGXM 3/100**	4,5	0,95	0,65	0,9		50	45,9	39,4	31,3	28,5	24,8	23,7	21,7		
NGX 4/110	3,7	2,2	**NGXM 4/110**	5,4	1	0,75	1		41,6	40	36,6	31,9	30	27,3	26,4	24,6	23	21,1

3~	230V	400V	1~	230V	P1	P2		Q m³/h	0	0,5	1	2	2,4	3	4	4,5	5	5,5	6	6,5	7	8	8,4
	A	A		A	kW	kW	HP	l/min	0	8,3	16,6	33,3	40	50	66,6	75	83,3	91,6	100	108	116	133	140
NGX 4/16	4,5	2,6	**NGXM 4/16**	7	1,6	1,1	1,5	H m	57,5	54	47,3	40	37,5	34	28,5	26							
NGX 4/18	4,5	2,6	**NGXM 4/18**	7	1,6	1,1	1,5		48	46	42,5	37	35	32,5	28,5	27	25						
NGX 4/22	4,5	2,6	**NGXM 4/22**	7	1,6	1,1	1,5		35,5	34,8	33	30,5	29,5	28	25,3	24	23	22	21	20,3	19,5	18	17,5
NGX 6/18/A	7,5	4,3	**NGXM 6/18**	9,2	2	1,5	2		58	54,7	51,5	46	44	41,3	37	34,7	32,5	30,5	28,5				
NGX 6/22/A	7,5	4,3	**NGXM 6/22**	9,2	2	1,5	2		46,5	45	43,5	40,5	39,3	37,5	35	33,5	32,5	31,2	30	28,5	27,5	25,5	24,5

P_1 Max. power input. P_2 Rated motor power output.

Tolerances according to UNI EN ISO 9906:2012

Characteristic curves for different suction lifts **Hs**

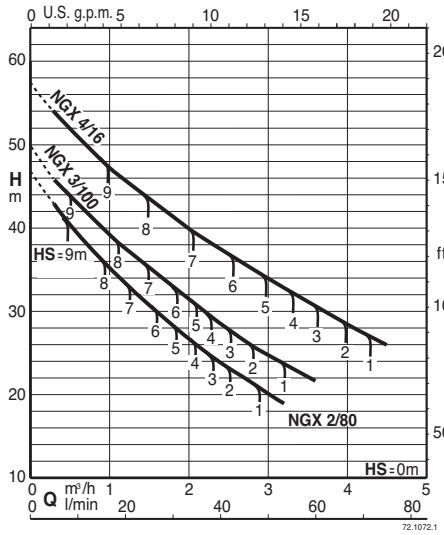

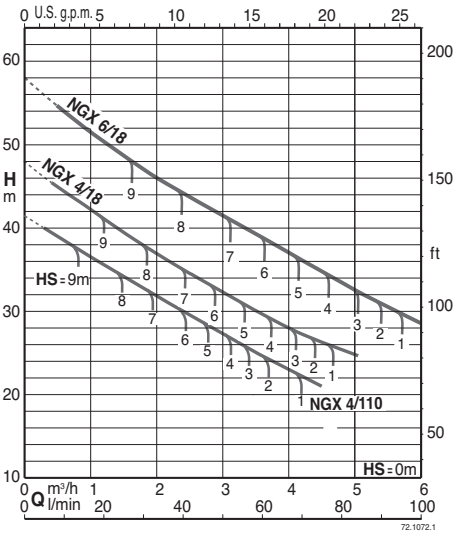

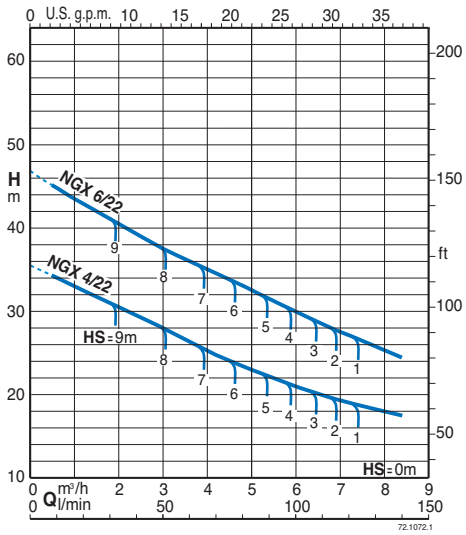

Self-priming capability

50 Hz (n ≈ 2800 1/min), H_2O, T = 20°C, Pa = 1000 hPa (mbar)

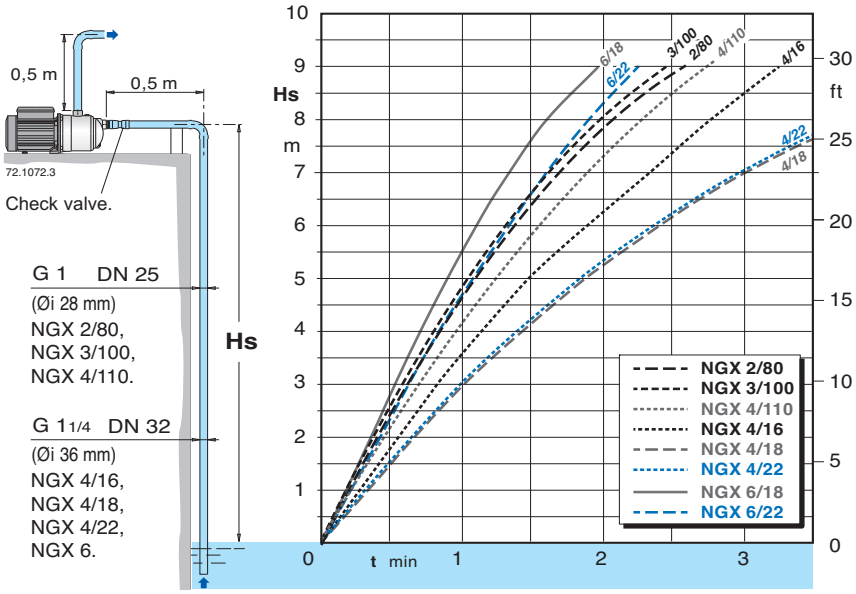

Hs (m) Suction lift.

t (min) Self-priming time.

Dimensions and weights

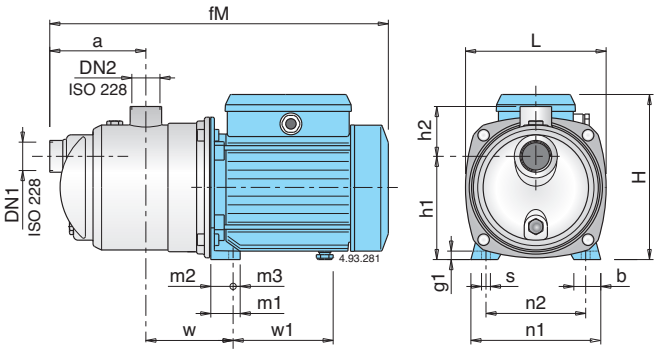

TYPE	DN1	DN2	Dimensions mm																Net weight kg	
	ISO 228		fM	a	w	h1	h2	H	L	m1	m2	m3	n1	n2	b	s	g1	w1	NGX	NGXM
NGX 2/80	G 1	G 1	362	115	95	116	61	176	161	33	25	8	146	112	30	9	10	102	6,9	7,1
NGX 3/100			391					192										112	8,3	9,2
NGX 4/110			391					192										112	10,2	10,2
NGX 4/16	G 1 1/4	G 1	462	140	113	152	68	225	213,5	37,5	28	9,5	185	155	33	9,5	11	147	14,5	14,8
NGX 4/18																				
NGX 4/22																				
NGX 6/18/A	G 1 1/4	G 1	488,5	140	113	152	68	240	213,5	37,5	28	9,5	185	155	33	9,5	11	157,5	17,8	18,2
NGX 6/22/A																				

Features

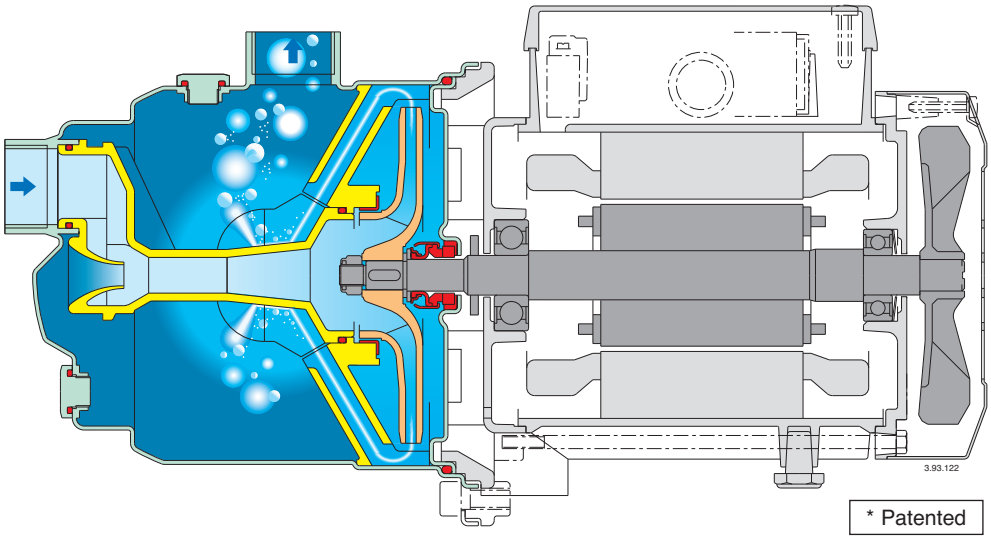

A different pump with new features
An exclusive diffuser design with flow control device* provides for compact construction, fast self-priming capability and low noise.

Reliable
With new design features the NGX is more robust and forgiving when temporary abnormal operating conditions may exist.

Compact
The NGX is smaller than conventional pumps of a similar type, allowing for installation in restricted spaces and providing for easier retrofit applications.

Safe
Fast air evacuation reduces the risk of air-pockets developing at the mechanical seal preventing the danger of seal failure due to a lack of flushing and cooling.

Better self-priming
The NGX are capable of lifting water from depths of 9 m in less than 4 minutes, offers new possibilities on suction lift applications and provides better trouble free service on normal shallow-well suction lift duties, also with a long suction pipe above the water level.

Low noise
The new diffuser and flow control device* guide the fluid from the impeller into the central part of the pump casing, reducing turbulence and velocity, with effective use of the surrounding liquid in dampening the noise of flow.

NGL

Self-Priming Pumps

calpeda

Construction

Close-coupled self-priming shallow-well pump with built-in ejector.

Applications

For drawing water out of a well.
For lifting water containing air or other gases.
For increasing water pressure from flooded suction applications.
As pressure boosting pump for central water systems with low pressure (follow local specifications if increasing network pressure).
For garden use.
For washing with a jet of water.

Operating conditions

Liquid temperature: 0 °C to +35 °C.
Ambient temperature up to +40 °C.
Suction lift up to 9 m.
Maximum permissible pressure in the pump casing: 8 bar.
Continuous duty.

Motor

2-pole induction motor, 50 Hz (n ≈ 2800 rpm).
NGL: three-phase 230/400 V ± 10%.
NGLM: single-phase 230 V ± 10%, with thermal protector.
Capacitor inside the terminal box.
Insulation class F.
Protection IP 54.
Classification scheme IE3 for three-phase motors from 0,75 kW.
Constructed in accordance with: EN 60034-1; EN 60034-30-1.
EN 60335-1, EN 60335-2-41.

Materials

Component	Material
Pump casing	Cast iron GJL 200 EN 1561
Casing cover	Cr-Ni steel 1.4301 EN 10088 (AISI 304)
Impeller	PPO-GF20 (Noryl)
Wear ring impeller-diffuser	Cr-Ni steel 1.4301 EN 10088 (AISI 304)
Diffuser	PPO-GF20 (Noryl)
Ejector	PPO-GF20 (Noryl)
Shaft	Chrome steel 1.4104 EN 10088 (AISI 430)
Mechanical seal	Carbon - Ceramic - NBR

Special features on request

- Other voltages.
- Frequency 60 Hz (as per 60 Hz data sheet).

Characteristic curves n ≈ 2800 rpm

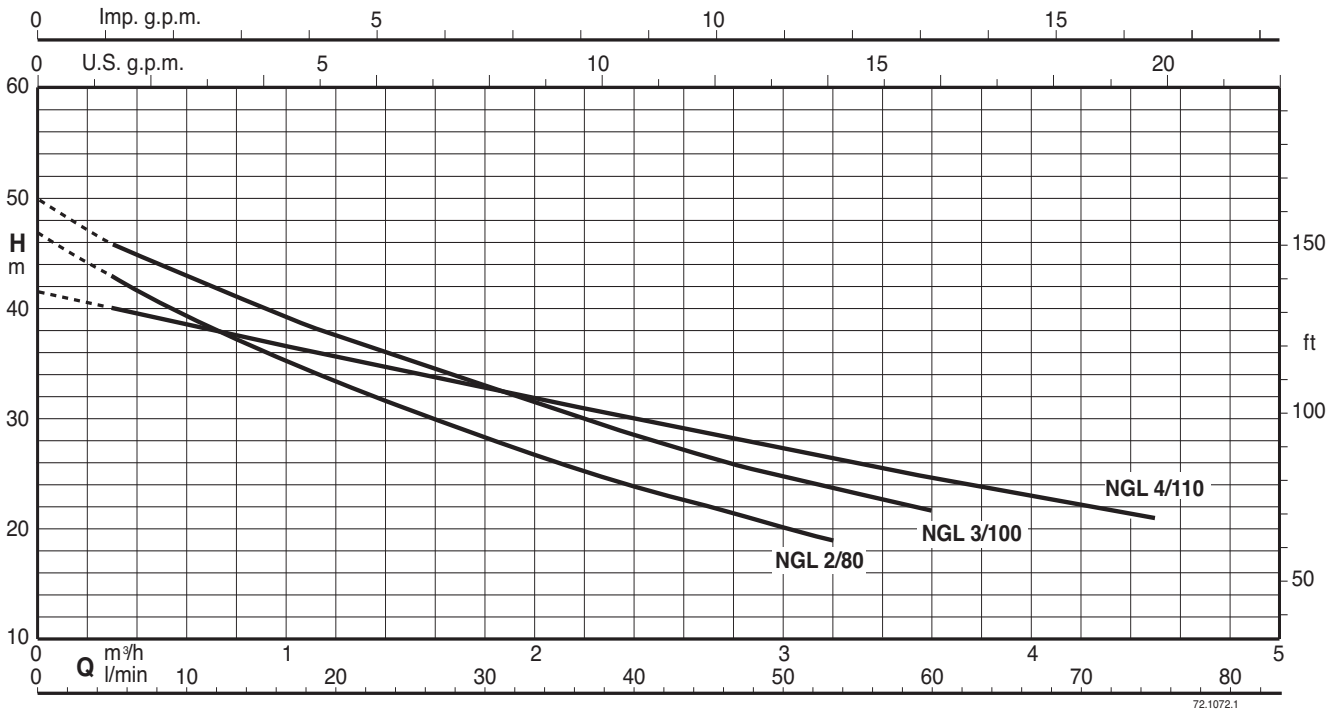

NGL

Self-Priming Pumps

Performance n ≈ 2800 rpm

3~	230V	400V	1~	230V	P1	P2		Q m³/h	0	0,3	1	2	2,4	3	3,2	3,6	4	4,5
		A	A	A	kW	kW	HP	l/min	0	5	16,6	33,3	40	50	53,3	60	66,6	75
NGL 2/80	2,8	1,6	**NGLM 2/80**	3,8	0,8	0,55	0,75	H m	46,8	43	35,2	26,7	23,9	20,2	19,1			
NGL 3/100	3	1,7	**NGLM 3/100**	4,5	0,95	0,65	0,9		50	45,9	39,4	31,3	28,5	24,8	23,7	21,7		
NGL 4/110	3,7	2,2	**NGLM 4/110**	5,4	1	0,75	1		41,6	40	36,6	31,9	30	27,3	26,4	24,6	23	21,1

P_1 Max. power input. P_2 Rated motor power output. Tolerances according to UNI EN ISO 9906:2012

Characteristic Curves for different suction lifts Hs

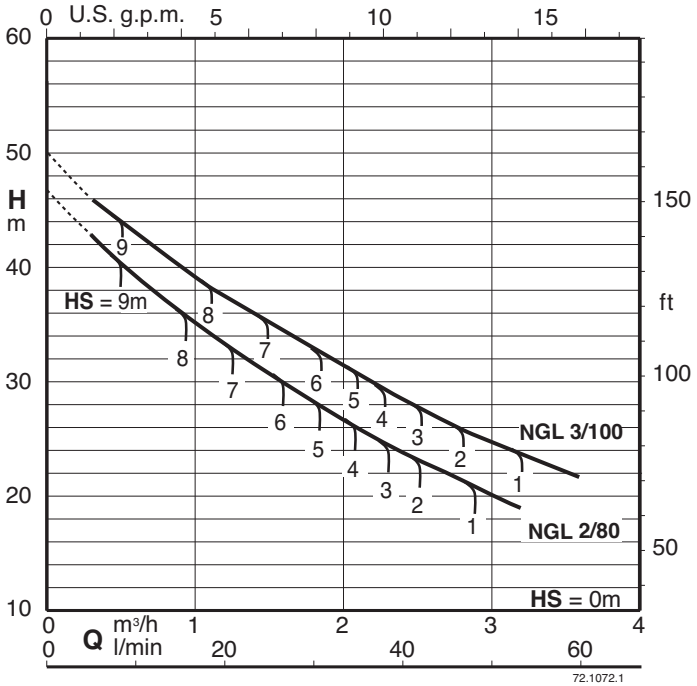

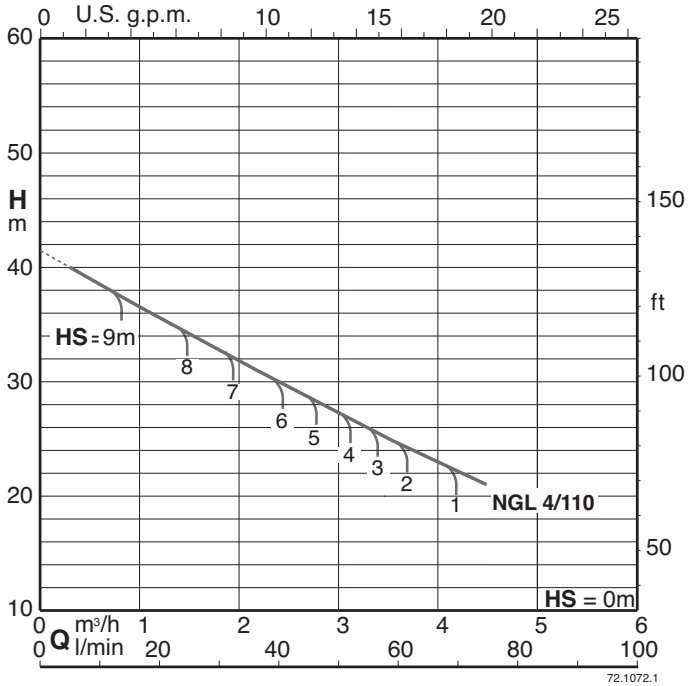

Self-priming capability

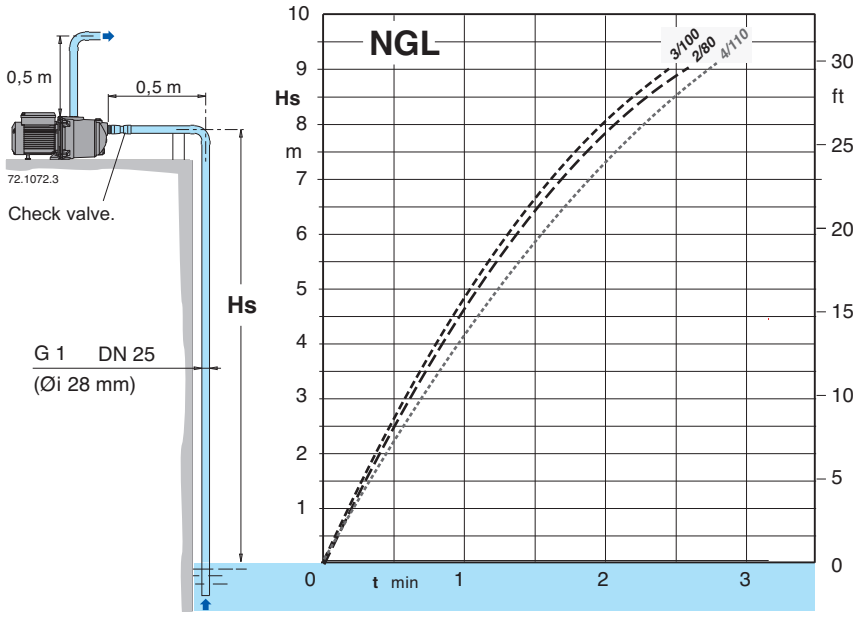

Hs (m) Suction lift.
t (min) Self-priming time.

Dimensions and weights

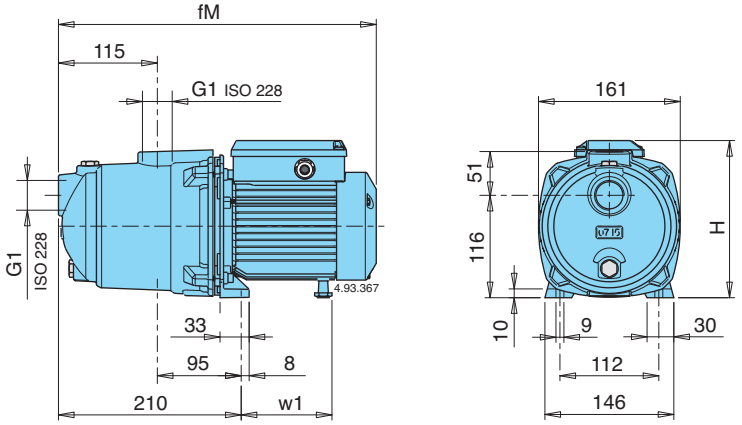

TYPE	Dimensions mm			Net weight kg	
	fM	H	w1	NGL	NGLM
NGL 2/80	362	176	102	9,8	9,9
NGL 3/100	391	192	112	11,1	12,1
NGL 4/110	391	192	112	13,1	13,1

Features

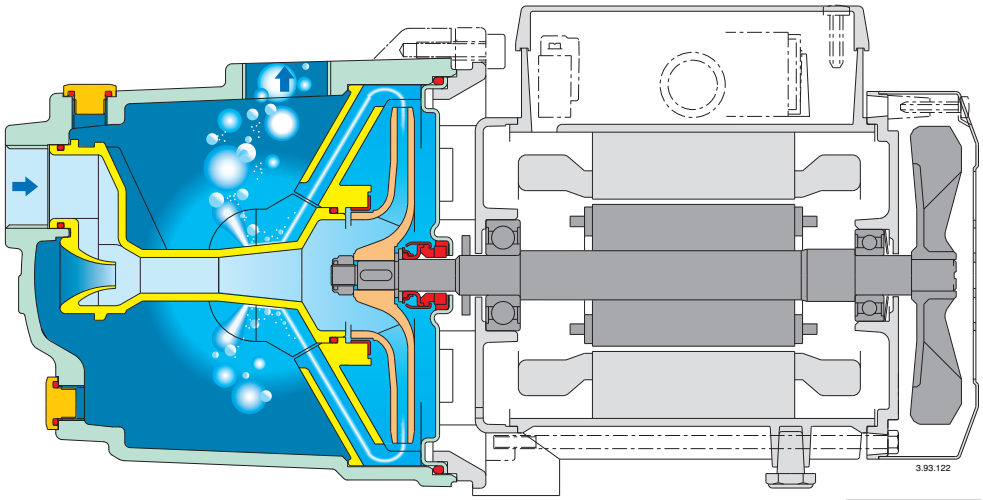

* Patented

A different pump with new features
An exclusive diffuser design with flow control device* provides for compact construction, fast self-priming capability and low noise.

Reliable
With new design features the NGL is more robust and forgiving when temporary abnormal operating conditions may exist.

Compact
The NGL is smaller than conventional pumps of a similar type, allowing for installation in restricted spaces and providing for easier retrofit applications.

Safe
Fast air evacuation reduces the risk of air-pockets developing at the mechanical seal preventing the danger of seal failure due to a lack of flushing and cooling.

Better self-priming
The NGL are capable of lifting water from depths of 9 m in less than 3 minutes, offers new possibilities on suction lift applications and provides better trouble free service on normal shallow-well suction lift duties, also with a long suction pipe above the water level.

Low noise
The new diffuser and flow control device* guide the fluid from the impeller into the central part of the pump casing, reducing turbulence and velocity, with effective use of the surrounding liquid in dampening the noise of flow.

NG

Self-Priming Pumps

Construction

Close-coupled self-priming shallow well jet pumps with built-in ejector.

NG: version with pump casing and lanter bracket in cast iron.
B-NG: version with pump casing and lanter bracket in bronze (the pumps are supplied fully painted).

Applications

For drawing water out of a well.
As pressure boosting pump for central water systems with low pressure (follow local specifications if increasing network pressure).
For clean liquids or slightly dirty surface water.
For garden use.
For washing with a jet of water.

Operating conditions

Liquid temperature up to 40 °C.
Ambient temperature up to 40 °C.
Maximum permissible working pressure up to 10 bar.
Continuous duty.

Motor

2-pole induction motor, 50 Hz (n ≈ 2900 rpm).
NG: three-phase 230/400 V ± 10%.
NGM: single-phase 230 V ± 10%, with thermal protector. Capacitor inside the terminal box.

Insulation class F.
Protection IP 54.
Classification scheme IE3 for three-phase motors from 0,75 kW.
Constructed in accordance with: EN 60034-1; EN 60034-30-1. EN 60335-1, EN 60335-2-41.

Materials

Components	NG	B-NG
Pump casing Cover with lantern bracket Diffuser plate	Cast iron GJL 200 EN 1561	Bronze G-Cu Sn 10 EN 1982
Impeller	Brass P- Cu Zn 40 Pb 2 UNI 5705	
Shaft	Cr steel 1.4104 EN 10088 (AISI 430) for NG 3-4	Cr-Ni-Mo steel 1.4401 EN 10088 AISI 316
	Cr-Ni steel 1.4305 EN 10088 (AISI 303) for NG 5-6-7	
Diffuser	PPO-GF20 (Noryl)	
Nozzle	PPO-GF20 (Noryl)	
Mechanical seal	Carbon - Ceramic - NBR	

Special features on request

- Other voltages. - Frequency 60 Hz (as per 60 Hz data sheet).
- Protection IP 55.
- Special mechanical seal

Characteristic curves for suction lift Hs = 1 m n ≈ 2900 rpm

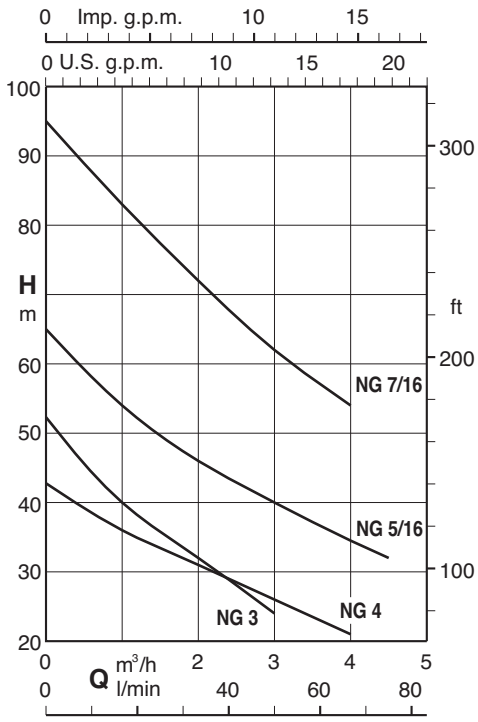

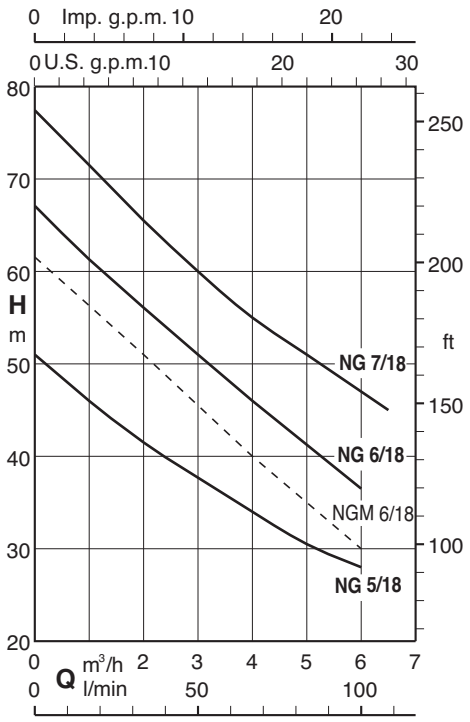

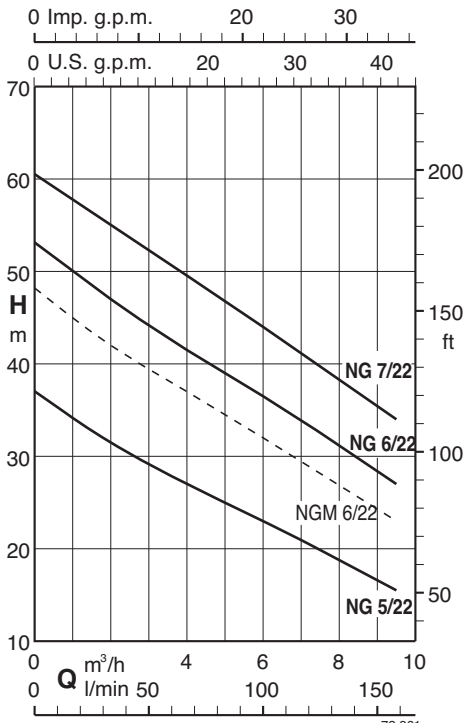

Performance for suction lift Hs = 1 m n ≈ 2900 rpm

3 ~	230V	400V	1 ~	230V	P1	P2		Q m³/h	0,25	0,5	1	1,5	2	2,5	3	3,5	4	4,5	5	5,5	6	6,5	7	8	9	9,5
	A	A		A	kW	kW	HP	l/min	4,1	8,3	16,6	25	33,3	41,6	50	58,3	66,6	75	83,3	91,6	100	108	116	133	150	158
B- **NG 3/A**	3	1,7	B- **NGM 3/A**	4,5	0,9	0,55	0,75	H m	49	45,5	40	36	32	28	24											
B- **NG 4/B**	3,7	2,2	B- **NGM 4/A**	5,7	1	0,75	1		41	39	36	33	31	29	26	24	21									
B- **NG 5/16/A**	4,7	2,7	B- **NGM 5/16E**	7,4	1,64	1,1	1,5			59	54	50	46	43	40	37	34,5	32								
B- **NG 5/18/A**	4,7	2,7	B- **NGM 5/18E**	7,4	1,68	1,1	1,5			48,5	46	43,5	41,5	39,5	38	35,5	34	32	30,5	29	28					
B- **NG 5/22/A**	4,7	2,7	B- **NGM 5/22E**	7,4	1,55	1,1	1,5			35,5	34,5	33	31,5	30,5	29,5	28	27	26	25	23,5	23	21,5	20,5	18,5	16,5	15,5
B- **NG 6/18/A**	7,5	4,3				1,5	2			64,5	62	59	56	54	51	48,5	46	43,5	41,5	39	36,5					
			B- **NGM 6/18E**	9,2	2	1,5	2			59	57	54	51	48	45	43	40	37,5	35	33	30					
B- **NG 6/22/A**	7,5	4,3				1,5	2			51,5	50	48,5	47	46	44,5	43	41,5	40	39	37,5	36,5	35	33,5	31	28,5	27
			B- **NGM 6/22E**	9,2	2	1,5	2			47	45	43,5	42	41	40	38	37	36	35	33	32	31	30	27	24	23
B- **NG 7/16/B**	9,15	5,3				2,2	3			89	83	77	72	67	62	58	54									
B- **NG 7/18/B**	9,15	5,3				2,2	3			74,5	71,5	68,5	65,5	63	60	57,5	55	53	51	49	47	45				
B- **NG 7/22/B**	9,15	5,3				2,2	3			59	57,5	56,5	55	54	52,5	51	50	48,5	47	45,5	44	42,5	41,5	38	35	34

P1 Max. power input. P2 Rated motor power output. B-NG, B-NGM = Bronze construction. Tolerances according to UNI EN ISO 9906:2012

Characteristic curves n ≈ 2900 rpm

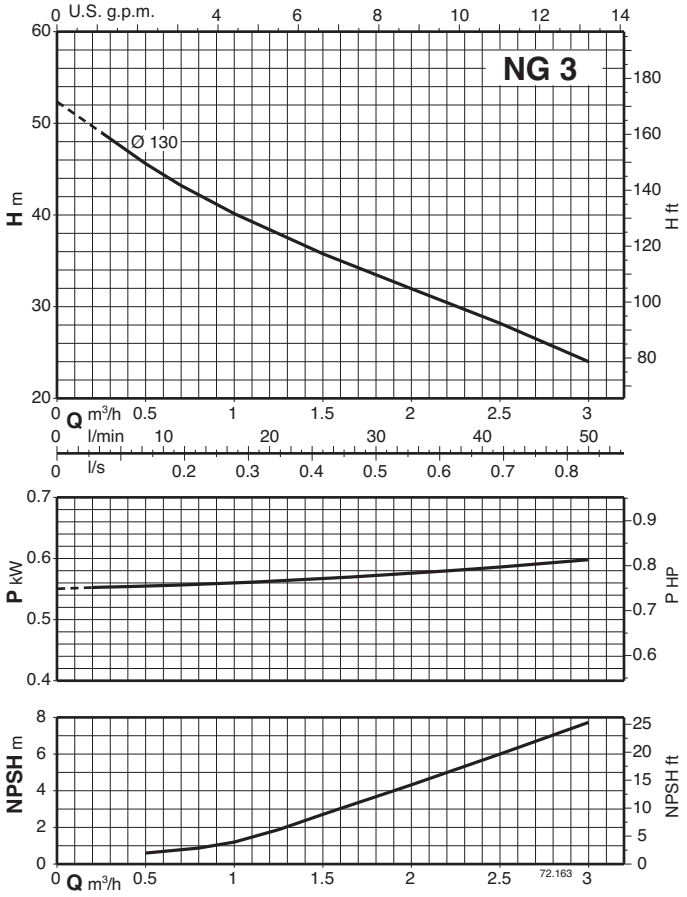

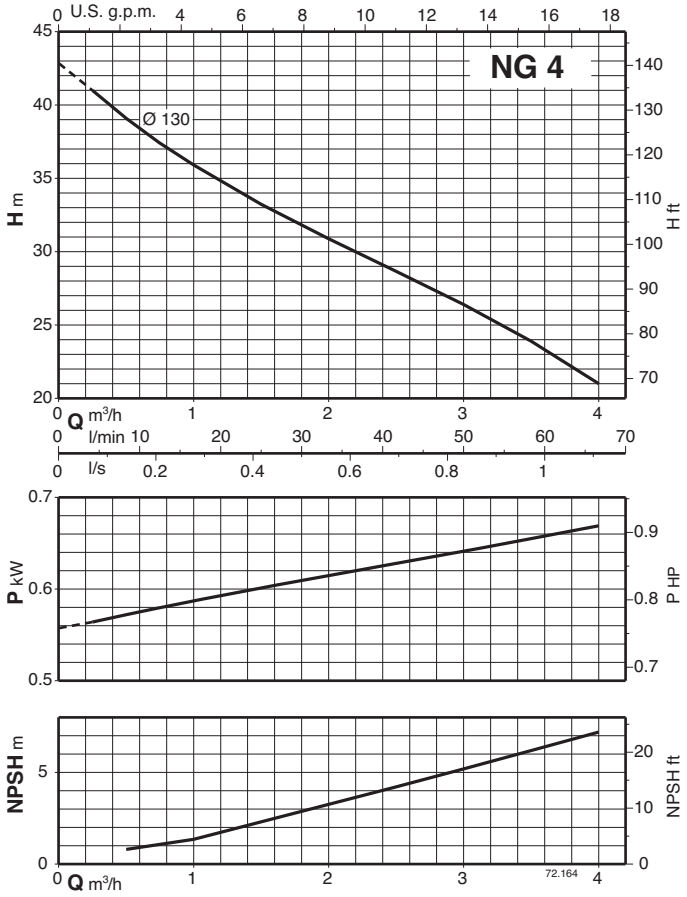

Characteristic curves n ≈ 2900 rpm

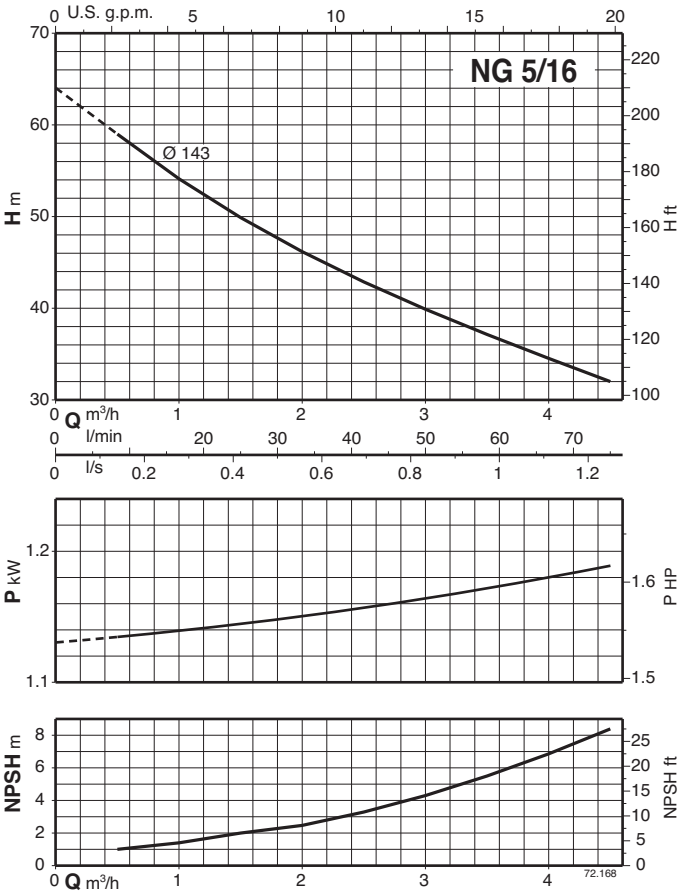

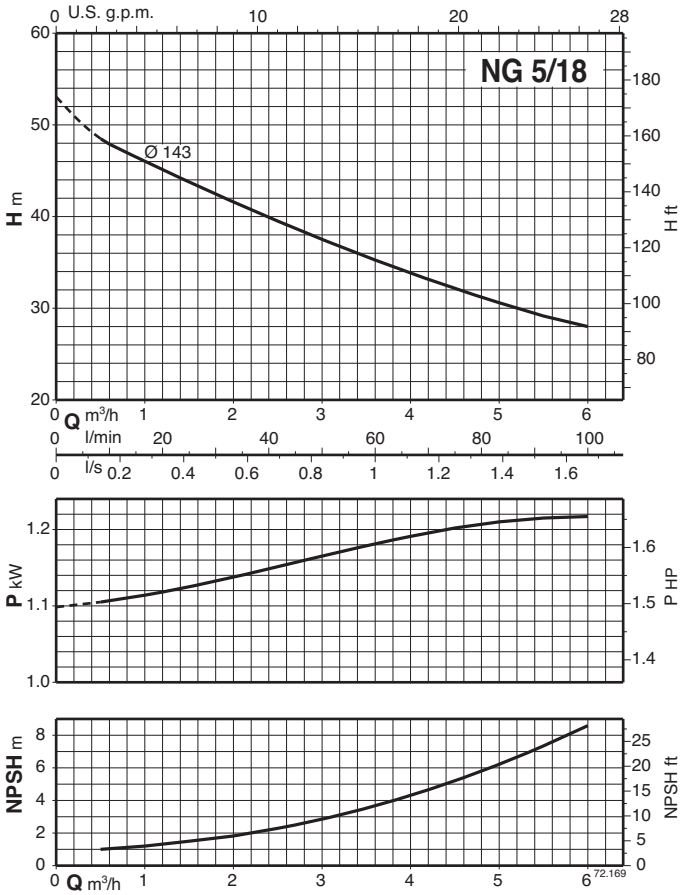

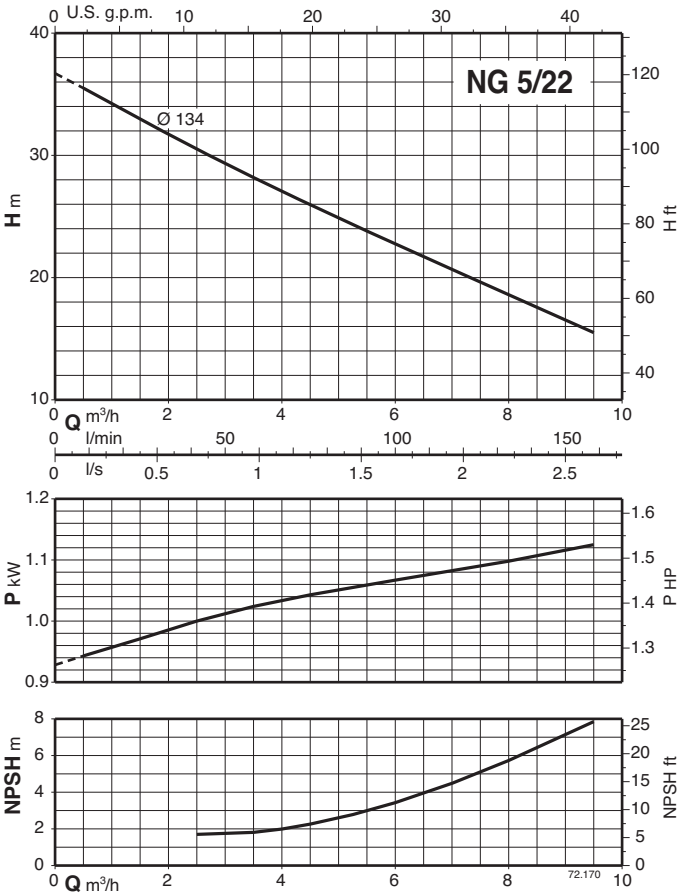

Characteristic curves n ≈ 2900 rpm

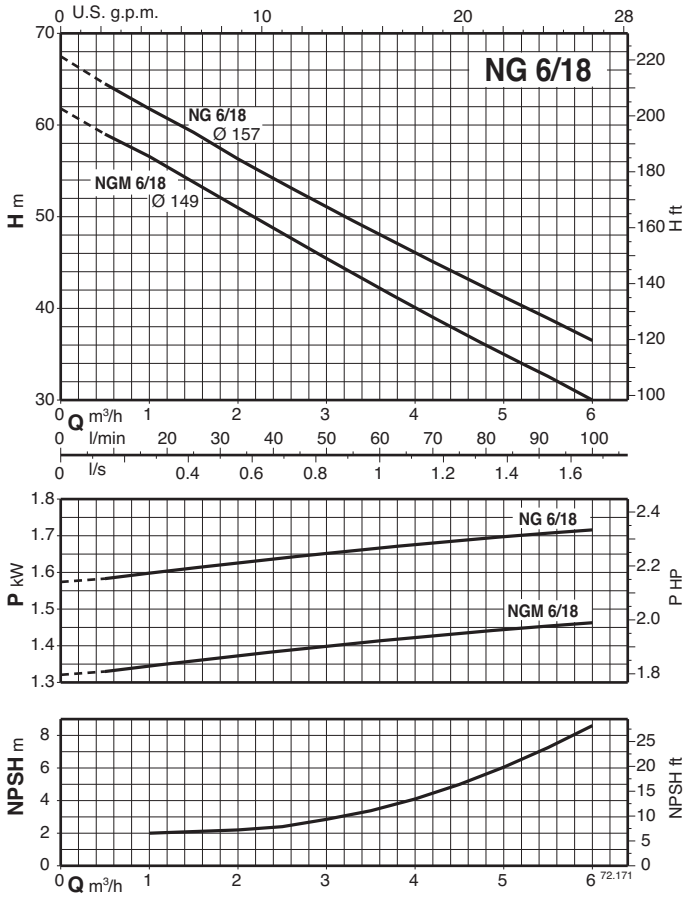

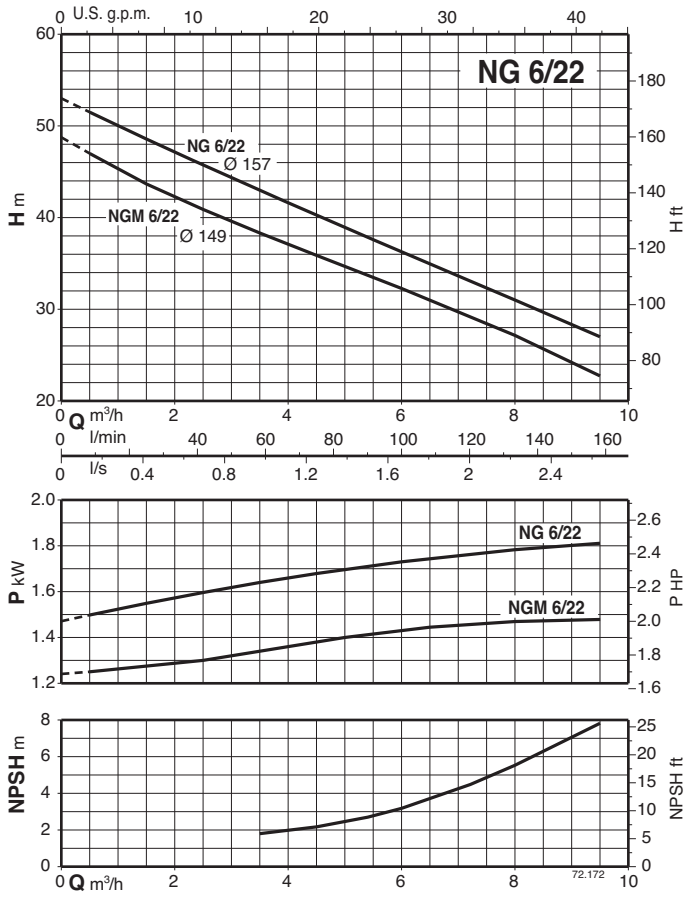

Characteristic curves n ≈ 2900 rpm

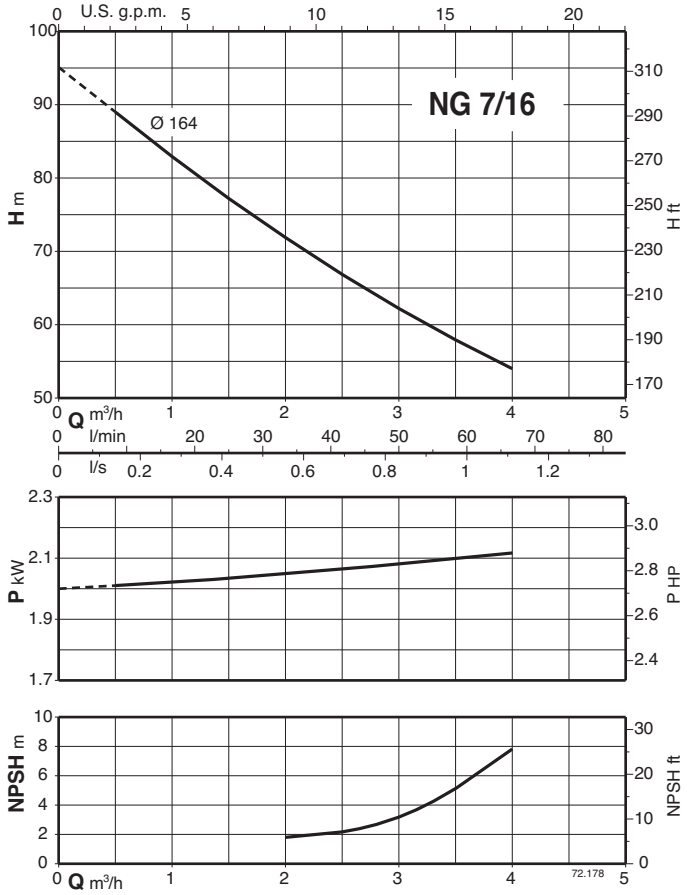

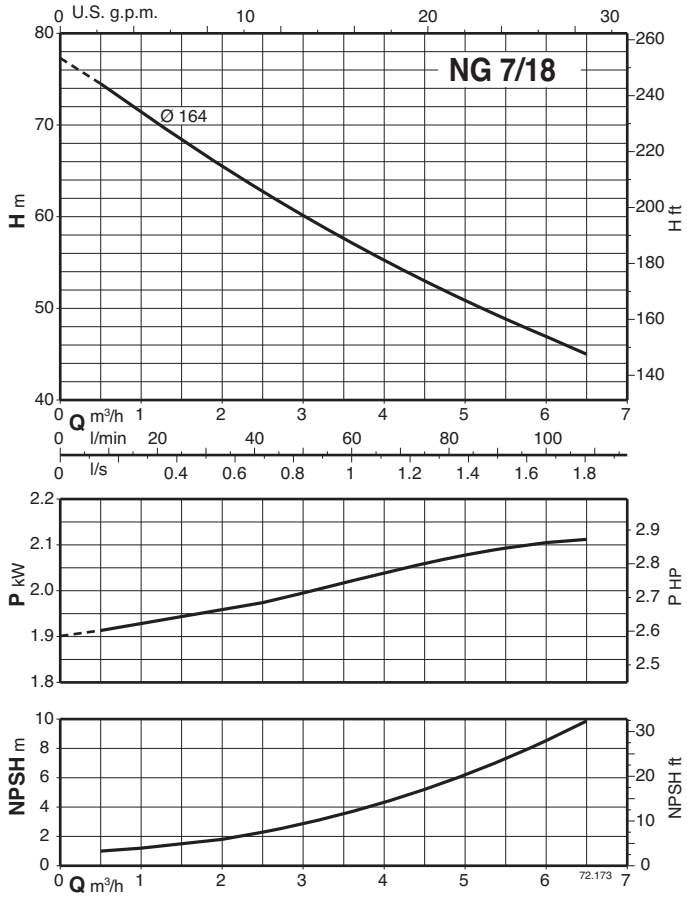

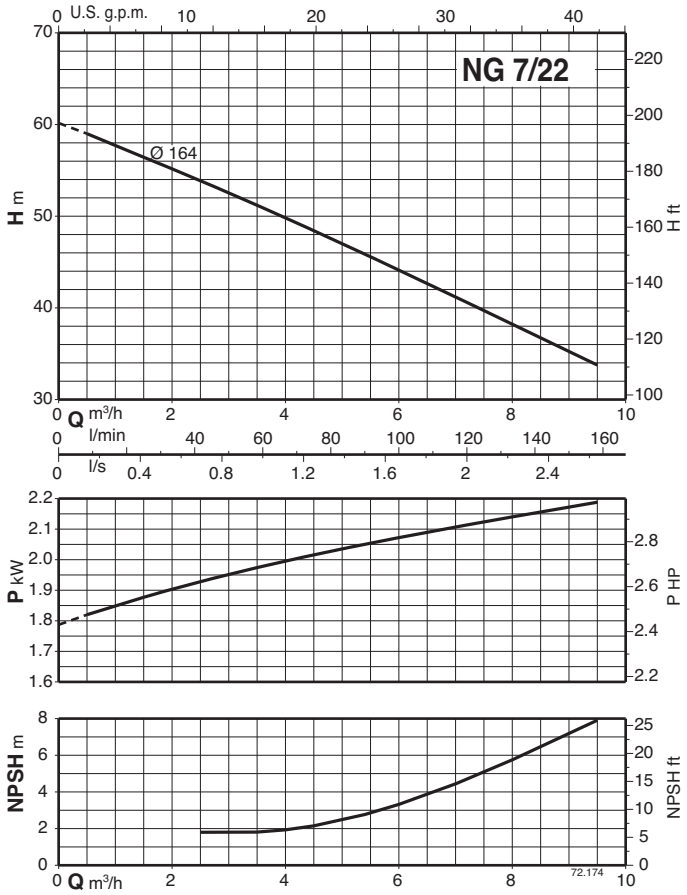

Dimensions and weights

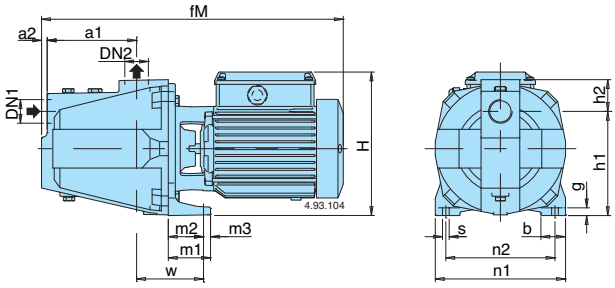

TYPE		DN1	DN2	mm															kg	
		ISO 228		a1	a2	fM	h1	h2	H	m1	m2	m3	n1	n2	b	s	w	g	NG	B-NG
NG 3/A	**B-NG 3/A**	G 1	G 1	127	8	430	150	43	207	60	52	8	185	155	35	9,5	100	11	18,4	20,8
NG 4/B	**B-NG 4/B**																		20,0	22,3
NG 5/A	**B-NG 5E**	G 1 1/2	G 1	160	10	560	165	57	240	60	50	10	215	175	40	11,5	115	11	29,2	31,6
NG 6/A	**B-NG 6E**					560													30,8	32,9
NG 7/B	**B-NG 7/A**					600													31,3	33,4

Installation examples

Positive suction head operation

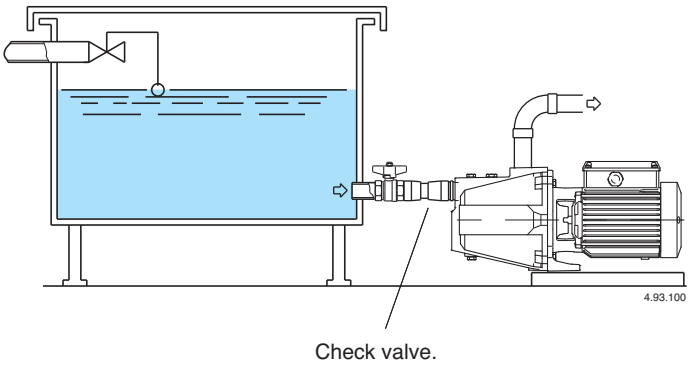

Suction lift operation

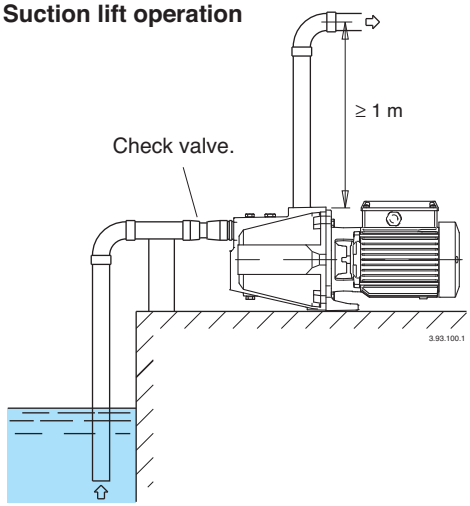

Features

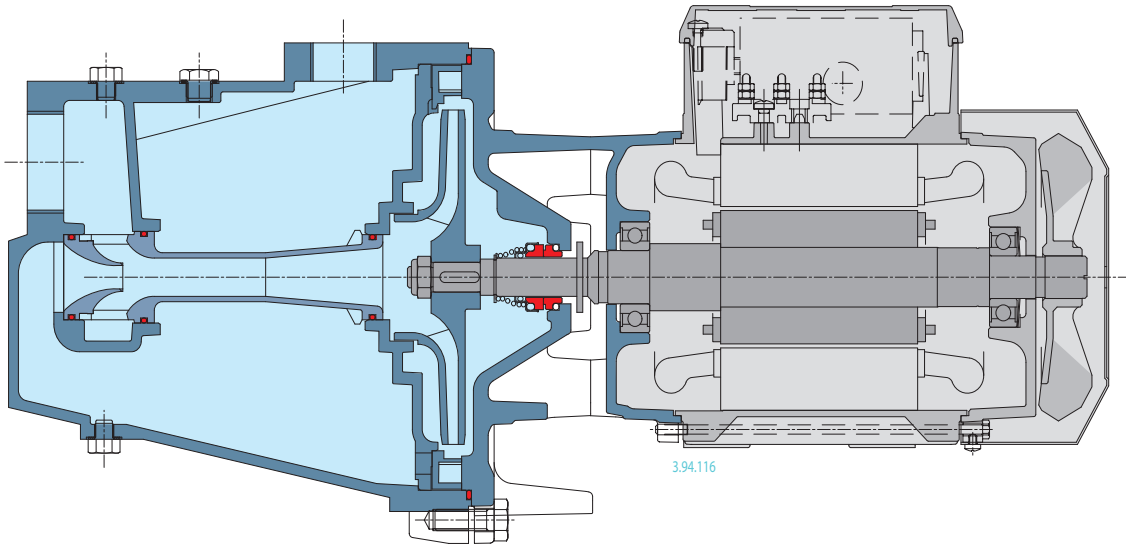

Robust
The mechanical structure of the hydraulic parts in contact with the pumped liquid are dimensioned to guarantee the maximum resistence to mechanical stress.

Self priming
The hydraulic design allows the pump to self prime even with the high suction lifts or with long suction pipe runs above the water level.

Flexible
The option to choose between cast iron and bronze materias for the hydraulic parts in contact with the pumped liquid allows NG series pumps to be selected for use with different types of liquids.

MXA

Multi-Stage Self-Priming Pumps

Construction

Horizontal multi-stage, self-priming, close coupled pump.
Single-piece barrel casing in chrome-nickel stainless steel, with front suction port above pumps axis and radial delivery at top.
Stages in Noryl.

Applications

For water supply.
For domestic use, for garden use and irrigation.

Operating conditions

Liquid temperature: 0 °C to +35 °C.
Ambient temperature up to +40 °C.
Suction lift up to 8 m.
Maximum permissible pressure in the pump casing: 8 bar.
Continuous duty.

Motor

2-pole induction motor, 50 Hz (n ≈ 2800 rpm).
MXA: three-phase 230/400 V ± 10%.
MXAM: single-phase 230 V ± 10%, with thermal protector. Capacitor inside the terminal box.
Insulation class F.
Protection IP 54.
Classification scheme IE3 for three-phase motors from 0,75 kW.
Constructed in accordance with: EN 60034-1; EN 60034-30-1. EN 60335-1, EN 60335-2-41.

Materials

Component	Material
Pump casing Casing cover	Cr-Ni steel 1.4301 EN 10088 (AISI 304) Cr-Ni steel 1.4301 EN 10088 (AISI 304)
Pump Shaft	Chrome steel 1.4104 EN 10088 (AISI 430)
Plug	Cr-Ni steel 1.4305 EN 10088 (AISI 303)
Suction casing Stage casing Impeller	PPO-GF20 (Noryl) PPO-GF20 (Noryl) PPO-GF20 (Noryl)
Mechanical seal	Carbon - Ceramic - NBR

Special features on request

- Other voltages.
- Frequency 60 Hz (as per 60 Hz data sheet).
- Protection IP 55.

Characteristic curves n ≈ 2800 rpm

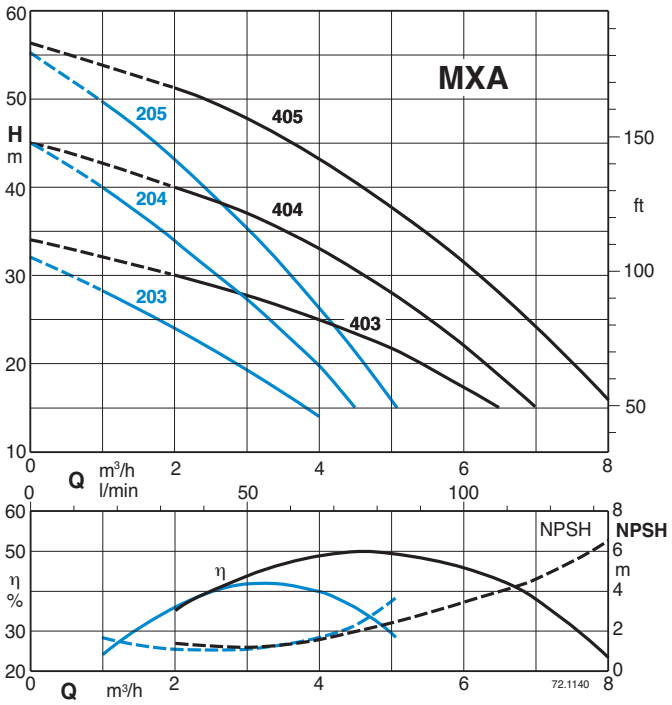

Self-priming capability

H_2O, T = 20°C,
Pa = 1000 hPa (mbar)
50 Hz (n ≈ 2800 1/min)

Hs (m) ≤	h (mm)					
	203	204	205	403	404	405
2	100	100	500	100	100	500
4	200	200	500	450	450	500
6	450	450	500	600	600	600
8	600	600	600	600	600	600

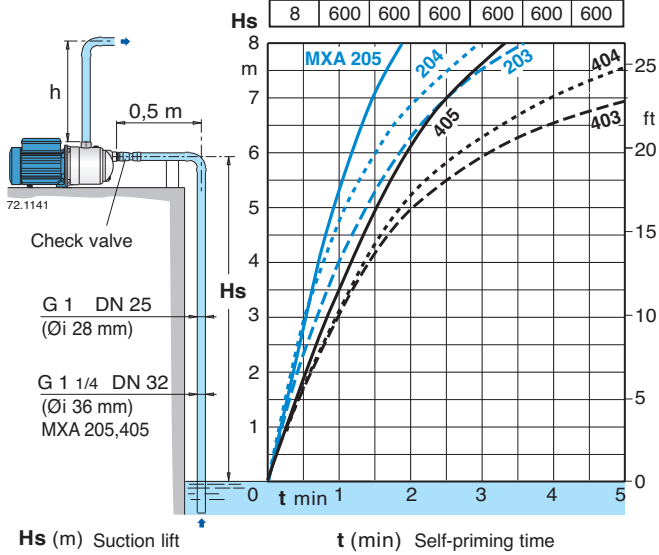

MXA

Multi-Stage Self-Priming Pumps

calpeda

Performance n ≈ 2800 rpm

3 ~	230 V	400 V	1 ~	230 V	P_1	P_2		Q m³/h	0	1	2	3	4	4,5	5		
	A	A		A	kW	kW	HP	Q l/min	0	16,6	33,3	50	66,6	75	83,3		
MXA 203	2,4	1,4	**MXAM 203**	3	0,63	0,45	0,6		32	28	24	19	14				
MXA 204/A	2,8	1,6	**MXAM 204/A**	4,2	0,8	0,55	0,75	**H** m	45	40	34	27	20	15			
MXA 205/B	3,5	2	**MXAM 205/A**	5,4	1	0,75	1		55,5	50	43	35,5	26,5	21,5	15,5		

3 ~	230 V	400 V	1 ~	230 V	P_1	P_2		Q m³/h	0	2	3	4	5	6	6,5	7	8
	A	A		A	kW	kW	HP	Q l/min	0	33,3	50	66,6	83,3	100	108,3	116,6	133,3
MXA 403/A	2,8	1,6	**MXAM 403/A**	4,2	0,9	0,55	0,75		34	30	28	25	22	17	15		
MXA 404/B	3,5	2	**MXAM 404/A**	5,4	1,2	0,75	1	**H** m	45	40	37	33	28	22	19	15	
MXA 405/A	4,5	2,6	**MXAM 405/A**	7	1,5	1,1	1,5		56	51	47,5	42,5	36,5	30	26,5	23	14

P_1 Max. power input.
P_2 Rated motor power output.

Test results with clean cold water, without gas content.
+ 0,5 m security margin on NPSH-value is necessary.

Tolerances according to UNI EN ISO 9906:2012
For capacities over 4 m³/h use a suction pipe G 1 1/4 (DN 32).

Dimensions and weights

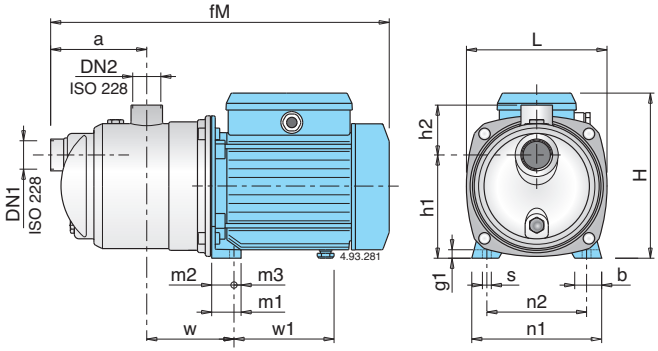

TYPE	DN1	DN2	Dimensions mm																Net weight kg	
	ISO 228		fM	a	w	h1	h2	H	L	m1	m2	m3	n1	n2	b	s	g1	w1	MXA	MXAM
MXA 203 - MXAM 203	G 1	G 1	362	115	95	116	61	176	161	33	25	8	146	112	30	9	10	102	6,6	6,7
MXA 204/A - MXAM 204/A	G 1	G 1	391	115	95	116	61	192	161	33	25	8	146	112	30	9	10	112	8,7	9,6
MXA 205/B - MXAM 205/A	G 1 1/4	G 1	462	140	113	152	68	225	213,5	37,5	28	9,5	185	155	33	9,5	11	147	13,3	13,8
MXA 403/A - MXAM 403/A	G 1	G 1	391	115	95	116	61	192	161	33	25	8	146	112	30	9	10	112	8,6	9,5
MXA 404/B - MXAM 404/A	G 1	G 1	391	115	95	116	61	192	161	33	25	8	146	112	30	9	10	112	9,5	10,5
MXA 405/A - MXAM 405/A	G 1 1/4	G 1	462	140	113	152	68	225	213,5	37,5	28	9,5	185	155	33	9,5	11	147	14,2	14,5

Features

Extra safety
against running dry, with the suction port above pump axis and with the self-priming construction.

Robust
Single-piece barrel casing.

Compact
Single-piece lantern bracket and base.

Low noise
with the water-filled shroud around the stages.

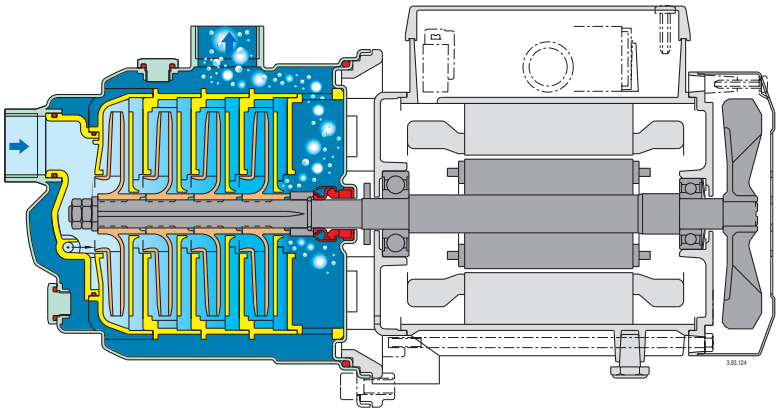

A

Self-Priming Centrifugal Pumps
with open impeller

Construction
Close-coupled centrifugal pumps with open impeller.
The built-in backflow preventer avoids reverse siphoning when the pump is stopped and assures automatic re-priming at the next start.
The pump re-primes itself even if partially filled with liquid and with completely empty suction pipe.
A: version with pump casing and lantern bracket in cast iron.
B-A: version with pump casing and lantern bracket in bronze (the pumps are supplied fully painted).

Applications
For clean or slightly dirty water, also with solids up to 10 mm grain size for A 40, A 50 and 15 mm for A 65, A 80.
For draining a basin or a sump.
For irrigation. For civil and industrial applications.

Operating conditions
Liquid temperature from -10 °C to +90 °C.
Room temperature up to 40 °C.
Maximum permissible working pressure up to 6 bar (10 bar for A 80-170).
Continuous duty.

Motor
2-pole induction motor, 50 Hz (n ≈ 2900 rpm).
A three-phase 230/400 V ± 10% up to 3 kW;
400/690 V ± 10% from 4 to 7,5 kW;
AM: single-phase 230 V ± 10%, with thermal protector.
Capacitor inside the terminal box.
Insulation class F.
Protection IP 54.
Classification scheme IE3 for three-phase motors from 0,75 kW.
Constructed in accordance with: EN 60034-1; EN 60034-30-1.
EN 60335-1, EN 60335-2-41.

Special features on request
Other voltages.
Frequency 60 Hz (as per 60 Hz data sheet).
Protection IP 55.
Special mechanical seal.
Higher or lower liquid or ambient temperatures.
Construction with bearing bracket.

Materials

Components	A	B-A
Pump casing Suction flange Inspection cover (for A 65, A 80) Lantern bracket Impeller	Cast iron GJL 200 EN 1561	Bronze G-Cu Sn 10 EN 1982
Shaft	Chrome-nickel steel 1.4305 EN 10088 (AISI 303)	Cr-Ni-Mo steel 1.4401 EN 10088 (AISI 316)
	Chrome steel 1.4104 EN 10088 (AISI 430) for A 40/110, A 65-150A,B	
Mechanical seal	Carbon - Ceramic - NBR	

Coverage chart n ≈ 2900 rpm

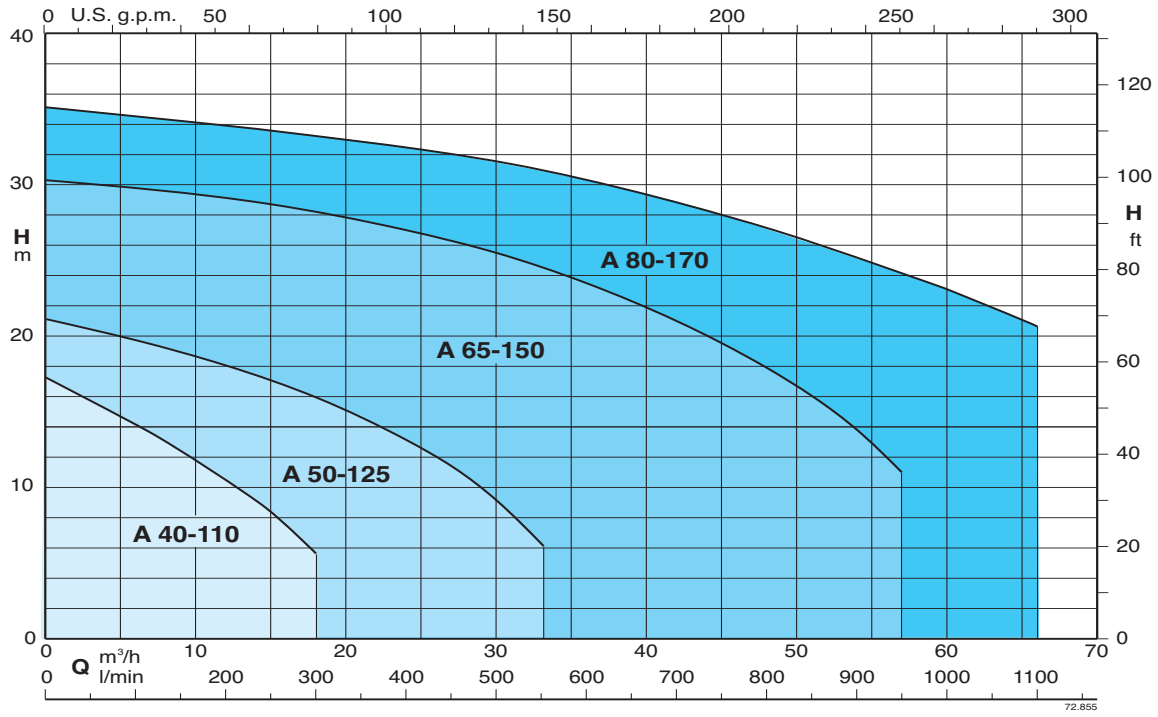

Performance n ≈ 2900 rpm

3 ~	230 V	400 V	1 ~	230 V	P1	P2		Q m³/h	3,6	4,8	6	7,5	8,4	9,6	10,8	12	15	18
	A	A		A	kW	kW	HP	l/min	60	80	100	125	140	160	180	200	250	300
A 40-110B/A B-A 40-110B/A	2,8	1,6	**AM 40-110B/A** B-AM 40-110B/A	4,5	0,85	0,55	0,75	**H** m	12,9	12,4	11,8	11	10,4	9,8	9	8,3	6	3,4
A 40-110A/B B-A 40-110A/B	3,7	2,2	**AM 40-110A/A** B-AM 40-110A/A	6	1,1	0,75	1		15,4	14,9	14,2	13,3	12,9	12,1	11,3	10,5	8,4	5,6

3 ~	230 V	400 V	1 ~	230 V	P1	P2		Q m³/h	6	9	12	15	18	21	24	27	30	33
	A	A		A	kW	kW	HP	l/min	100	150	200	250	300	350	400	450	500	550
A 50-125CE B-A 50-125CE	3,3	1,9	**AM 50-125CE** B-AM 50-125CE	5,8	1,2	0,75	1	**H** m	12,8	12,2	11,3	10	8,5	7	5,3	3,3		
A 50-125B/A B-A 50-125B/A	4,7	2,7	**AM 50-125BE** B-AM 50-125BE	7,4	1,6	1,1	1,5		15,5	14,9	14,2	12,9	11,6	10	8,3	6,2	4	
A 50-125A/A B-A 50-125A/A	7,5	4,3	**AM 50-125AE** B-AM 50-125AE	9,2	2,1	1,5	2		19,5	19	18	17	15,5	14	12,5	10,5	8	5

3 ~	230 V	400 V		P2		Q m³/h	15	18	24	30	33	36	42	48	54	57
	A	A		kW	HP	l/min	250	300	400	500	550	600	700	800	900	950
A 65-150C/C B-A 65-150C/B	11,5 9,15	6,6 5,3		2,2	3	**H** m	17,5	17	16	14	13	11,5	9	6,5		
A 65-150B/B B-A 65-150B/A	11,5	6,6		3	4		21,5	21	19,5	17,5	16,5	15,5	12,5	9,5	6,5	
A 65-150A/C B-A 65-150A/B	-	9,6		4	5,5		29	28	27	25,5	24,5	23,5	21	18	14	11

3 ~	230 V	400 V		P2		Q m³/h	15	18	21	24	30	36	45	54	60	66
	A	A		kW	HP	l/min	250	300	350	400	500	600	750	900	1000	1100
A 80-170B/A B-A 80-170B/A	-	10,9		5,5	7,5	**H** m	27,3	27,3	27	26,8	25,7	24,4	22,1	19	16,7	13,7
A 80-170A/A B-A 80-170A/A	-	14,3		7,5	10		33,6	33,2	32,9	32,5	31,6	30,5	28,1	25,3	23,2	20,4

P_1 Maximum power input. P_2 Rated motor power output. **H** Total head in m. B-A, B-AM = Bronze construction. Tolerances according to UNI EN ISO 9906:2012

Self-priming capability

with DN 40 mm suction pipe

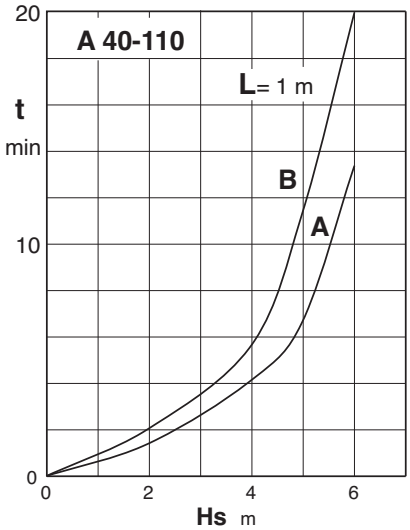

with DN 50 mm suction pipe

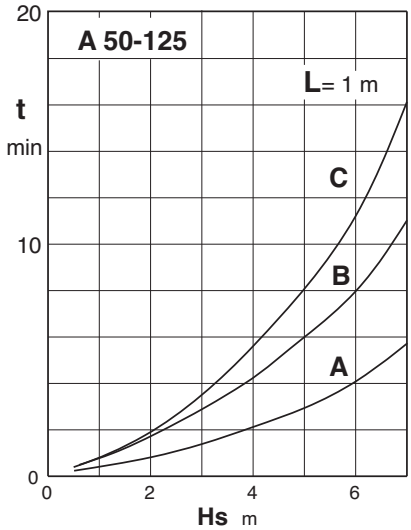

with DN 65 mm suction pipe

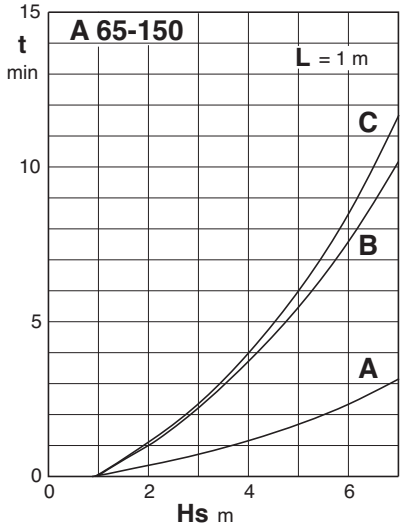

with DN 80 mm suction pipe

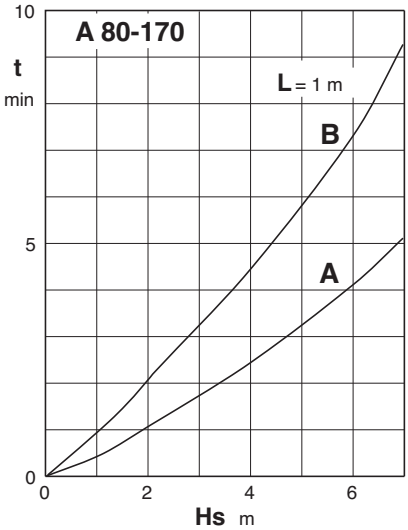

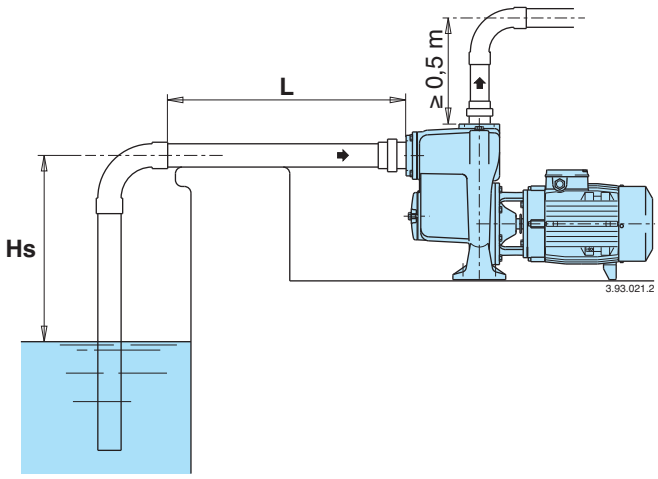

Hs (m) Suction lift.
L (m) Horizontal length of suction pipe above the water level.
t (min) Self-priming time.

Characteristic curves n ≈ 2900 rpm

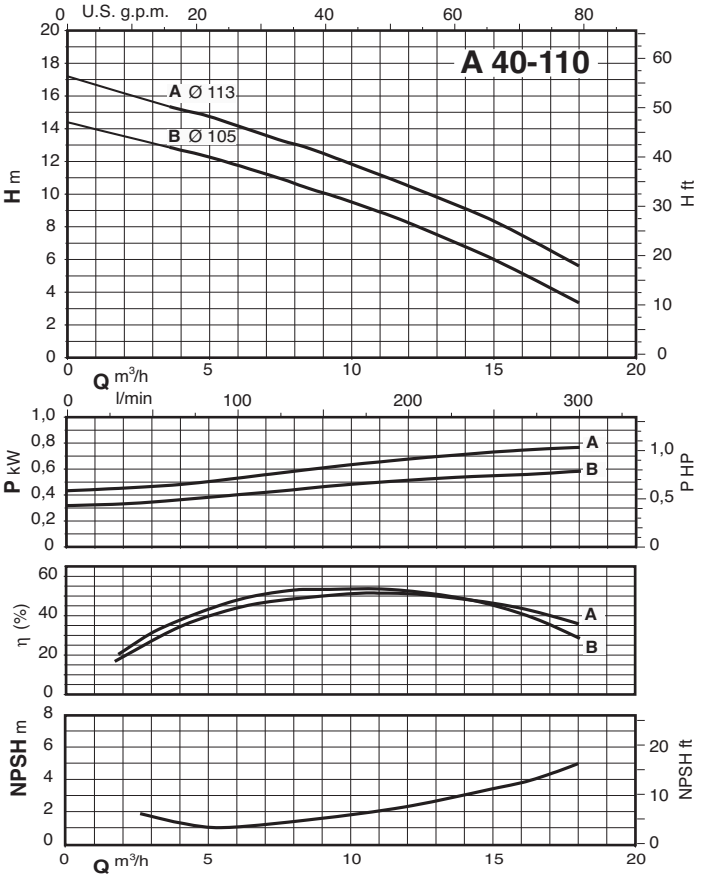

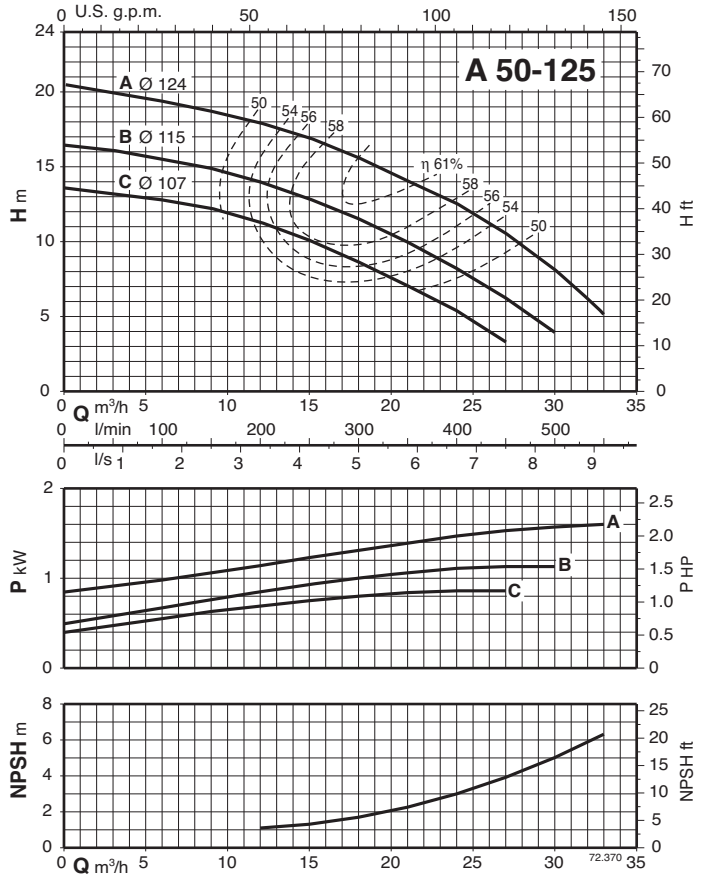

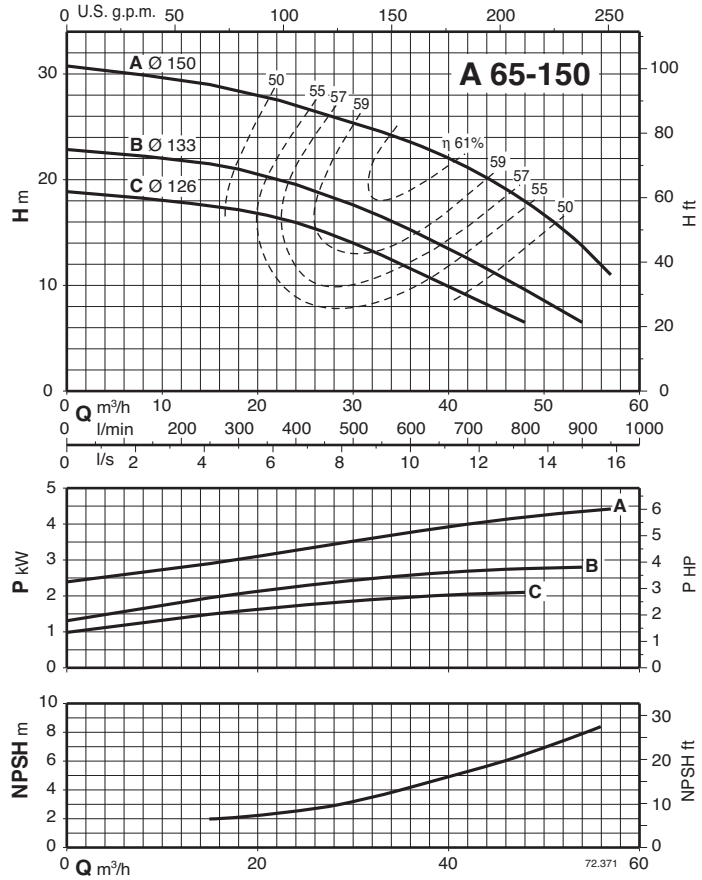

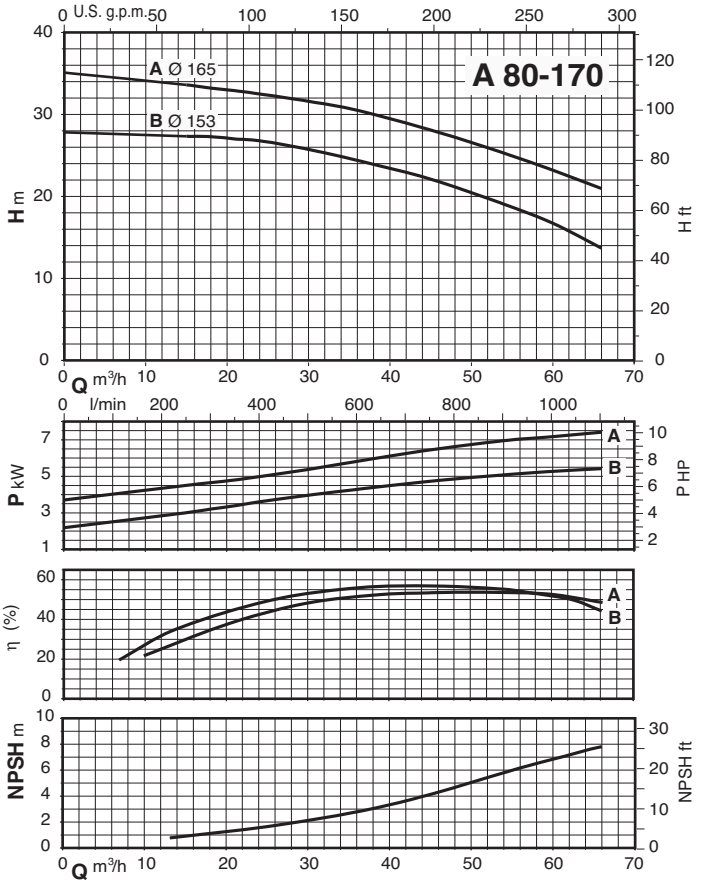

Dimensions and weights

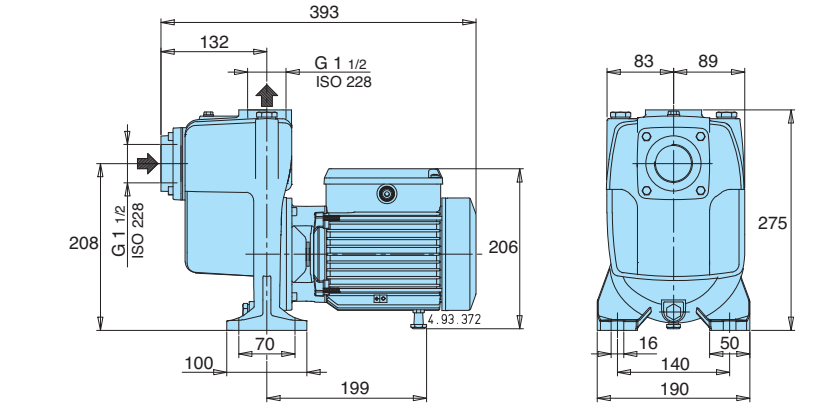

	kg
A 40-110A/B AM 40-110A/A	20,6 20,8
A 40-110B/A AM 40-110B/A	18,9 19,8
B-A 40-110A/B B-AM 40-110A/A	23,3 23,5
B-A 40-110B/A B-AM 40-110B/A	21,6 22,5

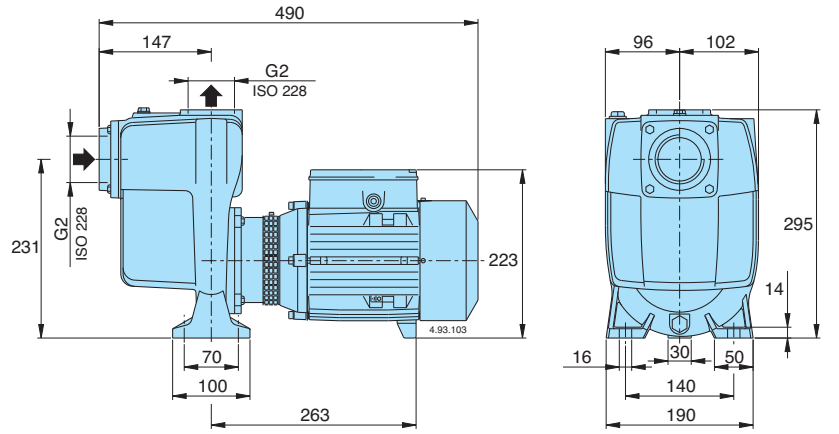

	kg
A 50-125A/A AM 50-125AE	29,9 31
A 50-125B/A AM 50-125BE	28 29,1
A 50-125CE AM 50-125CE	26,9 27,8
B-A 50-125A/A B-AM 50-125AE	33,6 33,6
B-A 50-125B/A B-AM 50-125BE	31 32,6
B-A 50-125CE B-AM 50-125CE	29,6 30,6

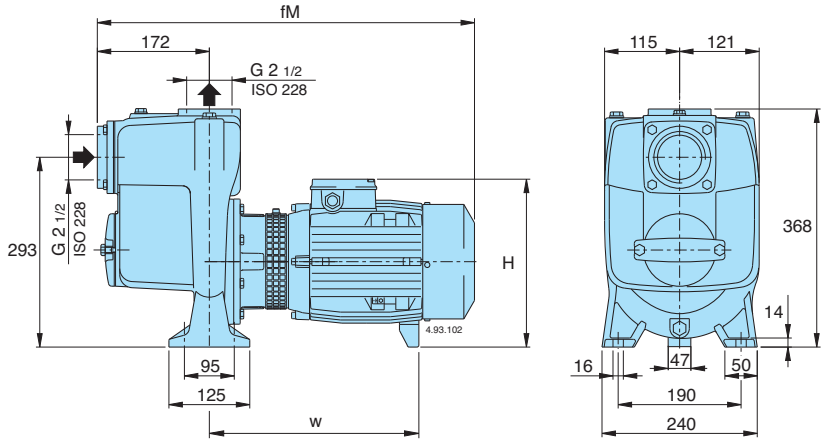

TYPE	mm			kg
	fM	H	w	
A 65-150C/C B-A 65-150C/B	595 583	270 260	324 319	56,7 50,4
A 65-150B/B B-A 65-150B/A	595	270	324	57 58,5
A 65-150A/C B-A 65-150A/B	595	270	324	58,5 60

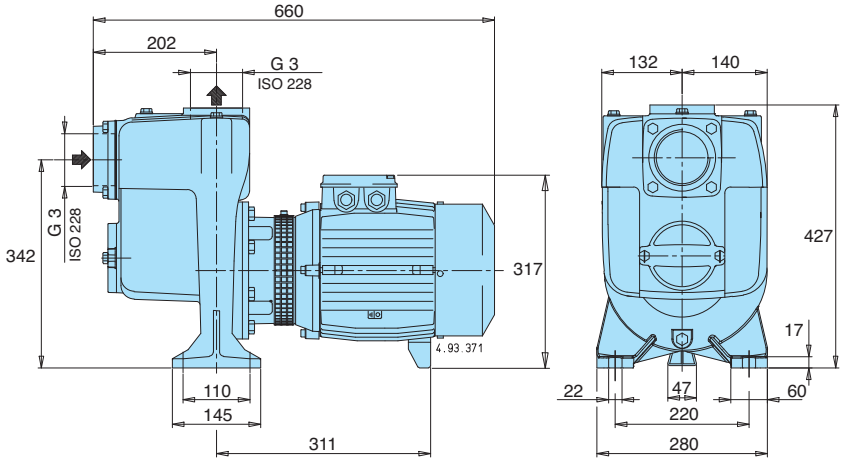

	kg
A 80-170A/A	85,8
A 80-170B/A	80,3
B-A 80-170A/A	95,6
B-A 80-170B/A	90,1

Features

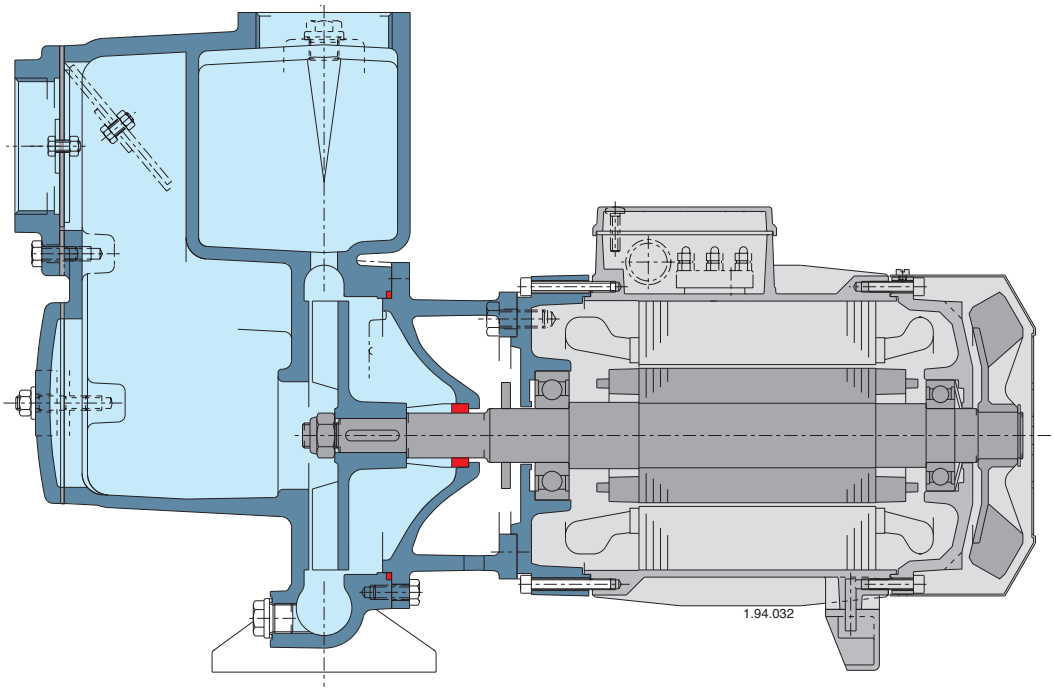

Fast self priming
An integrated non-return valve and the design of the pump casing ensures rapid priming, once the pump body has been filled with water.

Flexible
The option to choose between cast iron and bronze materias for the hydraulic parts in contact with the pumped liquid allows A series pumps to be selected for use with different types of liquids.

Solid parts
The open impeller allows for the passage of suspended solids in pumped liquid.

Exclusive design
An innovative, patented guard prevents contact with rotating parts, proving protection to the end user whilst allowing for inspection of the mechanical seal.

Reliable
The bearing and shaft are designed to ensure the reduction of the stress, providing high reliability under all operating conditions.

CA

Self-Priming Liquid Ring Pumps

Construction

Close-coupled self-priming liquid ring pumps with star impeller and anti-lock wear ring.
CA: version with pump casing and lantern bracket in cast iron.
B-CA: version with pump casing and lantern bracket in bronze (the pumps are supplied fully painted).

Applications

For clean liquids without abrasives, without suspended solids, non-explosive, non-aggressive for the pump materials.
If the liquid to be pumped has entrained air or gas or the flow in the suction pipe is not stable.
For drawing water out of a well.
For increasing network pressure (follow local specifications).

Operating conditions

Liquid temperature from -10 °C to +90 °C.
Ambient temperature up to 40 °C.
Negative suction pressure up to 9 m.
Continuous duty.

Motor

2-pole induction motor, 50 Hz (n ≈ 2900 rpm).

CA: three-phase 230/400 V ± 10%.

CAM: single-phase 230 V ± 10%, with thermal protector. Capacitor inside the terminal box.

Insulation class F.
Protection IP 54.
Classification scheme IE3 for three-phase motors from 0,75 kW.
Constructed in accordance with: EN 60034-1; EN 60034-30-1. EN 60335-1, EN 60335-2-41.

Materials

Components	CA	B-CA
Pump casing Lantern bracket	Cast iron GJL 200 EN 1561	Bronze G-Cu Sn 10 EN 1982
Impeller	Brass P- Cu Zn Pb 2 UNI 5705	
Shaft	Chrome steel 1.4104 EN 10088 (AISI 430)	Cr-Ni-Mo steel 1.4401 EN 10088 (AISI 316)
Mechanical seal	Carbon - Ceramic - NBR	

Special features on request

- Other voltages.
- Frequency 60 Hz (as per 60 Hz data sheet).
- Protection IP 55.
- Special mechanical seal
- Higher or lower liquid or ambient temperatures.
- Construction with bearing bracket.

Coverage chart n ≈ 2900 rpm

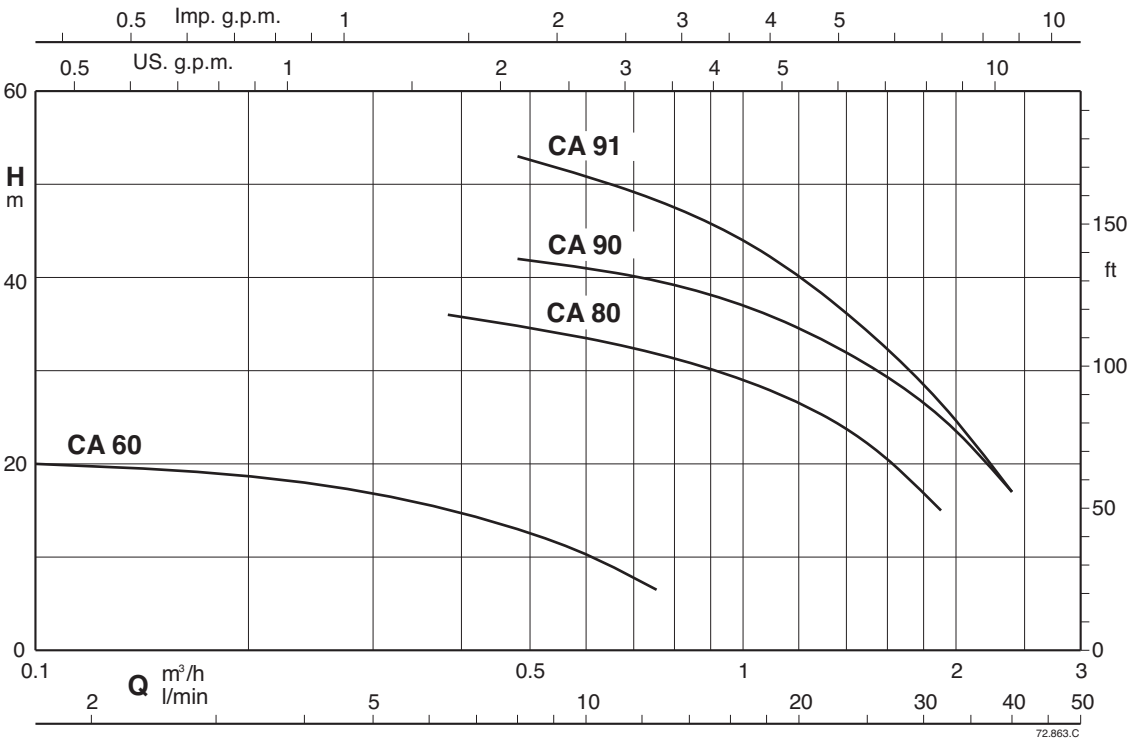

CA

Self-Priming Liquid Ring Pumps

calpeda

Performance n ≈ 2900 rpm

3 ~	230 V	400 V	1 ~	230 V	P_1	P_2		Q m^3/h	0,12	0,24	0,38	0,48	0,6	0,75	1	1,2	1,5	1,89	2,4
	A	A		A	kW	kW	HP	l/min	2	4	6,3	8	10	12,5	16	20	25	31,5	40
CA 60E B-CA 60E	1,7	1	**CAM 60E** B-CAM 60E	1,6	0,26	0,15	0,2	**H** m	20	18	15,5	13	10,5	6,5					
CA 80E B-CA 80/A	2,8 2,3	1,6 1,3	**CAM 80E** B-CAM 80/A	3,3 3,6	0,72	0,45	0,6				36	35	33,5	31,5	29	26	22	15	
CA 90/A B-CA 90/A	3	1,7	**CAM 90/A** B-CAM 90/A	4,5	0,9	0,55	0,75					42	41	40	37	34	30	25	17
CA 91/B B-CA 91/B	3,7	2,2	**CAM 91/A** B-CAM 91/A	5,7	1,2	0,75	1					53	51	48	44	39	34	26,5	17

P_1 Maximum power input. P_2 Rated motor power output. B-CA = Bronze construction. **H** Total head in m.

Dimensions and weights

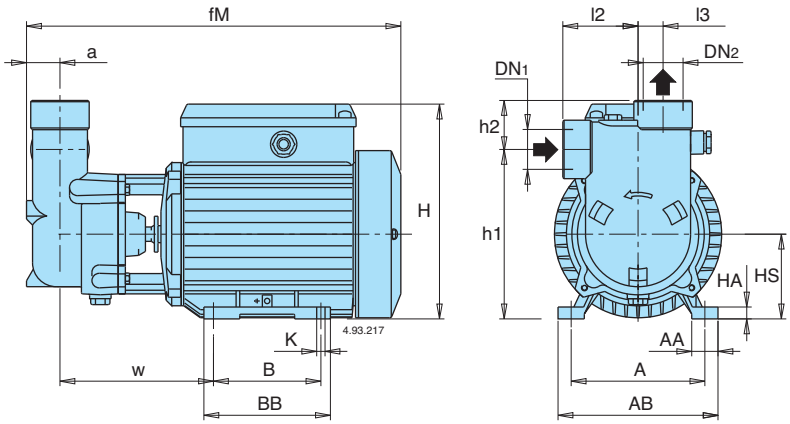

TYPE	DN1	DN2	mm																kg	
	ISO 228		a	fM	HS	h2	h1	H	BB	B	AB	A	AA	K	l2	l3	w	HA	**CA**	**B-CA**
CA 60E - B-CA 60E	G 1/2	G 1/2	18	256	63	25	103	158	96	80	122	100	22	7	45	14	103	8	6	6,8
CA 80E	G 3/4	G 3/4	23	272	63	27	126	158	96	80	122	100	22	7	55	17	109	8	7,6	-
CA 90/A	G 1	G 1	28	318	71	41	142	182	106	90	134	112	22	7	63	21	128	10	10,8	-
CA 91/B																			12,2	-

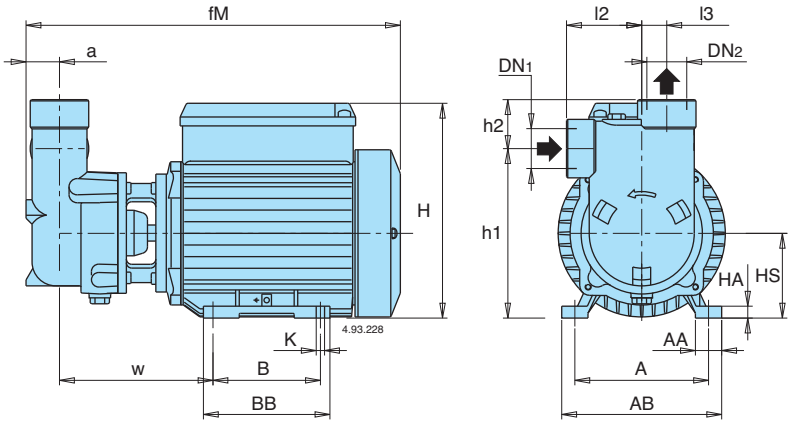

TYPE	DN1	DN2	mm																kg
	ISO 228		a	fM	HS	h2	h1	H	BB	B	AB	A	AA	K	l2	l3	w	HA	**B-CA**
B-CA 80/A	G 3/4	G 3/4	23	307	71	27	134	182	106	90	134	112	22	7	55	17	122	10	10
B-CA 90/A	G 1	G 1	28	318	71	41	142	182	106	90	134	112	22	7	63	21	128	10	13,1
B-CA 91/B																			14,7

Characteristic curves n ≈ 2900 rpm

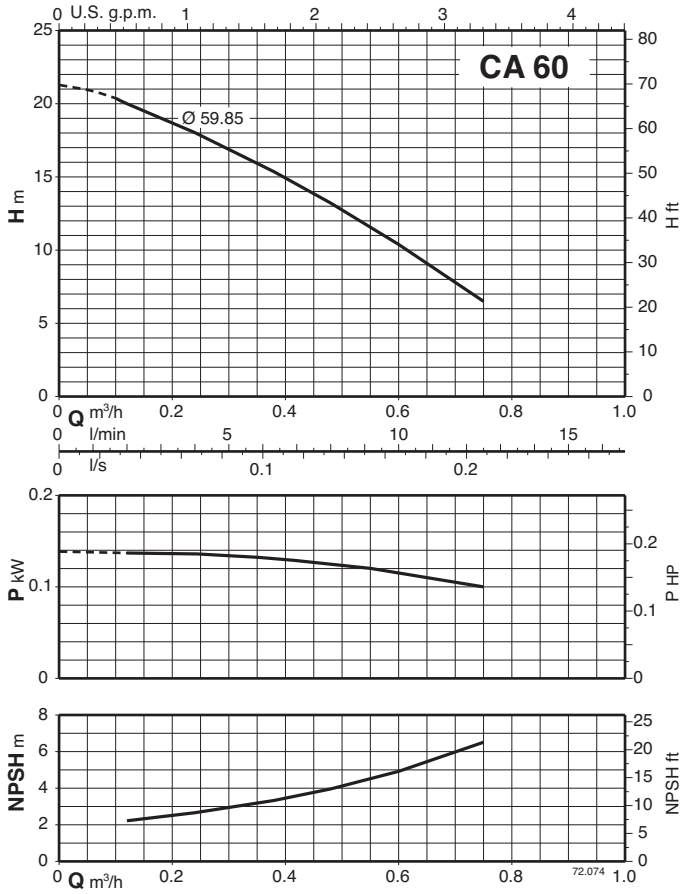

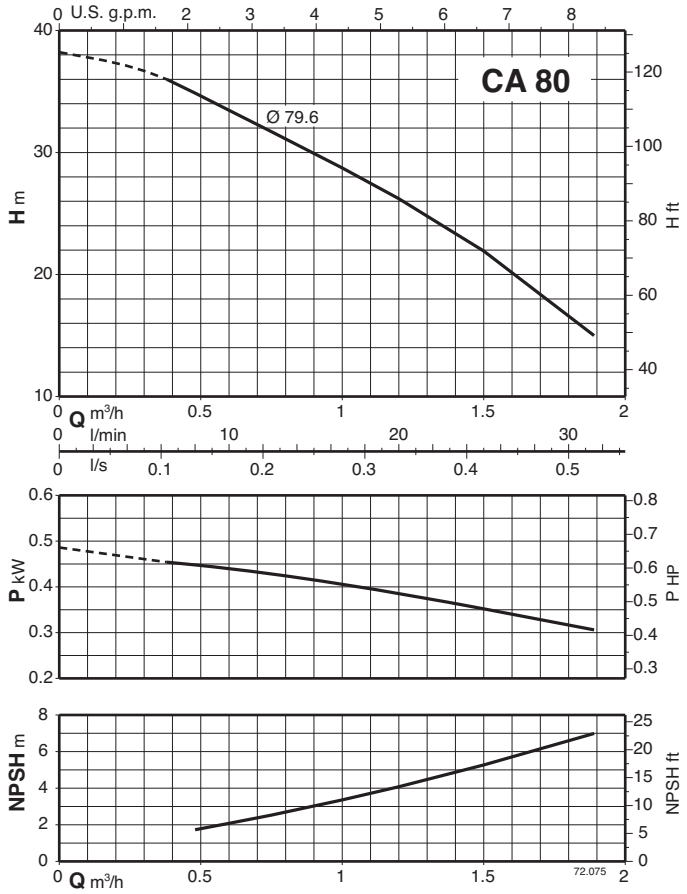

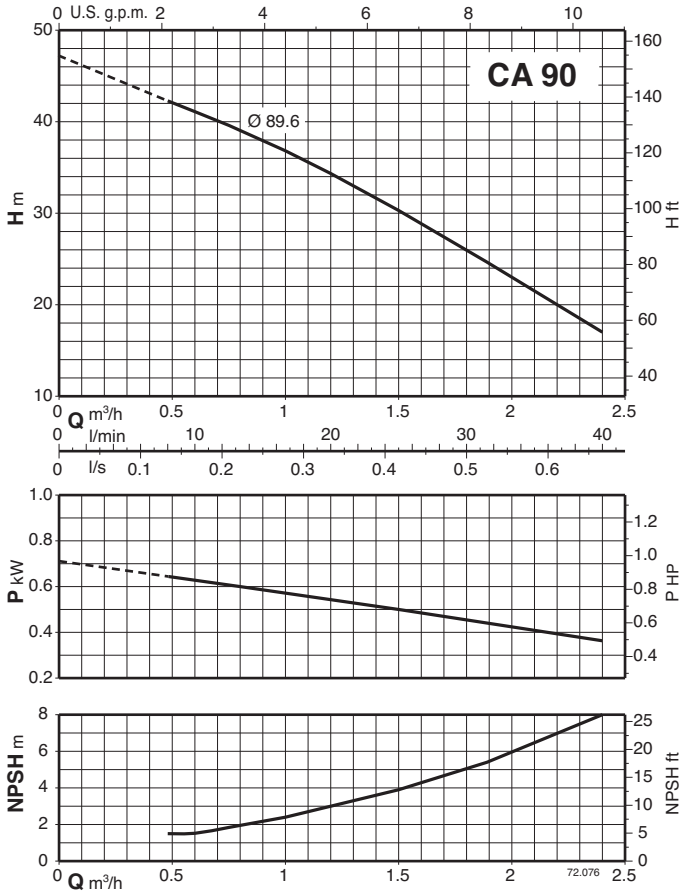

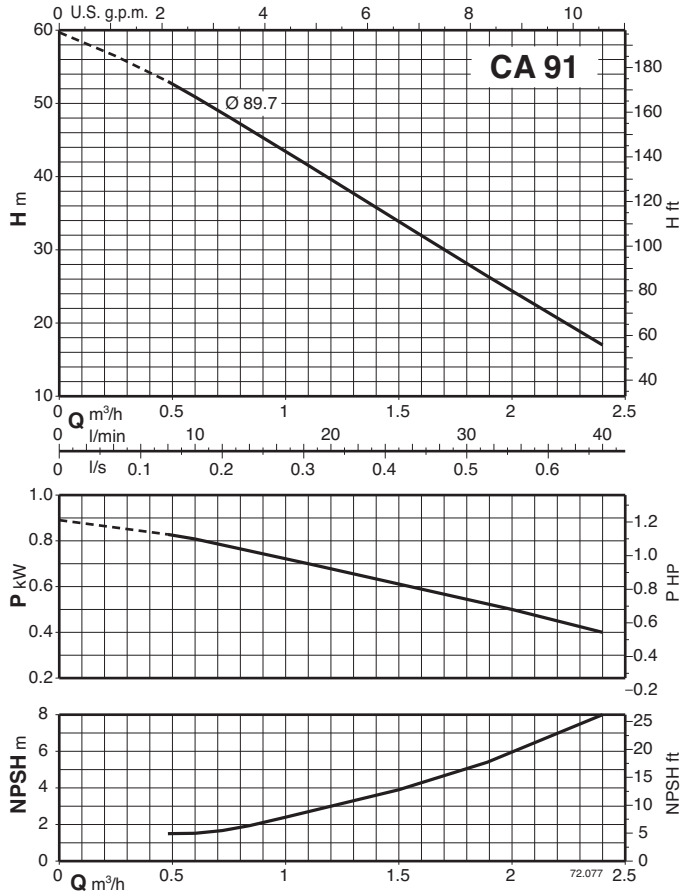

Features

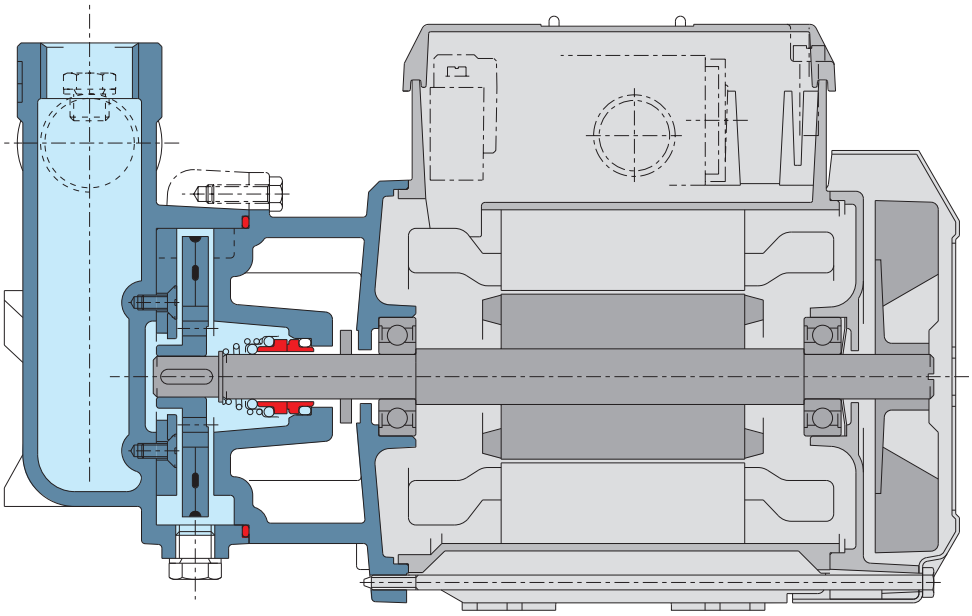

Fast self priming
The hydraulic design ensures fast self priming once the pump body is filled with water.

Flexible
The option to choose between cast iron and bronze materias for the hydraulic parts in contact with the pumped liquid allows CA series pumps to be selected for use with different types of liquids.

Easy maintenance
The construction features an anti-wear ring screwed to the pump body, allowing for rapid replacement in case of wear.